浙江以赛亚实业有限公司
Zhejiang Isaiah Industrial Co.,Ltd

ISAIAH

8

ISAIAH 浙江以赛亚实业有限公司
Zhejiang Isaiah Industrial Co.,Ltd

制 造 商: 宁波英特灵气动科技有限公司
Manufacturer: NingBo Intell Pneumatic Technology Co.,Ltd

中国宁波市奉化区高新技术园区汇茂路1号
Add: 1 Huimao Rd.,High-tech zone,Fenghua,
Ningbo,P.R.China
Tel:+86-574-88908789
Fax: +86-574-88906828
Http://www.isaiahpc.com
Email:isaiah@isaiahpc.com

产品繁多，且不断推陈出新及改良功能，本公司保留变更规格的权利，恕不另行通知。
版权所有，翻录必究。
Products are in great varieties,new products are constantly recommended and their functions are improved.Our company reserves the right to change the specifications without giving separate notice.All right reserved.

样册仅供参考，以实物为准
The catalog is for reference only and the actual product shall prevail.

2026版

ISAIAH

浙江以赛亚实业有限公司是一家集研发、制造、销售与服务为一体的高端气动元件和精密连接器的源头厂家。公司坐落于享有“国家气动集群示范基地”美誉的浙江省宁波市奉化区，地理位置优越，交通物流便捷。

一、雄厚实力与卓越产品

公司立足制造根本，引进一流生产装备与制造工艺，拥有数十条自动化装配流水线及数百台现代化加工设备，为产品的高效、可靠与卓越性能提供了坚实保障。销售网络不仅覆盖全国各省，更远销全球80多个国家和地区。

二、创新驱动与战略升级

自创立以来，公司始终以 “引领流体接头的创新与发展” 为使命，通过持续引进高端自动化设备、优化核心模具、部署专业人才并升级智能化管理系统，成功实现了产品质量的精益化与生产效率的显著提升，基于此内生的强大动能，公司正成功实现从传统气动接头向高精度、高技术含量的精密连接器领域的战略跨越，致力于为全球智能化行业提供稳定、可靠的流体技术解决方案。

三、企业文化与核心价值

- **企业使命：** 引领流体接头的创新与发展。
- **企业愿景：** 打造竞争力强，被各行业标杆指定合作的配套单位，为全球客户提供高性价比的流体接头。
- **核心价值观：**

发展观：	创新、改善	效益观：	严谨、务实
质量观：	稳定、可靠	为人观：	尽责、诚信
定位观：	专业、专注	合作观：	共创、共享

四、经营理念与承诺

我们秉持“创新发展、提高品质、建设品牌、共享成果”的经营理念，以客户为中心，追求满意服务，兑现每一项承诺。以赛亚公司正以专业、专注的态度，与全球伙伴共创价值，共享成果，共同推动流体传动领域的进步与发展。

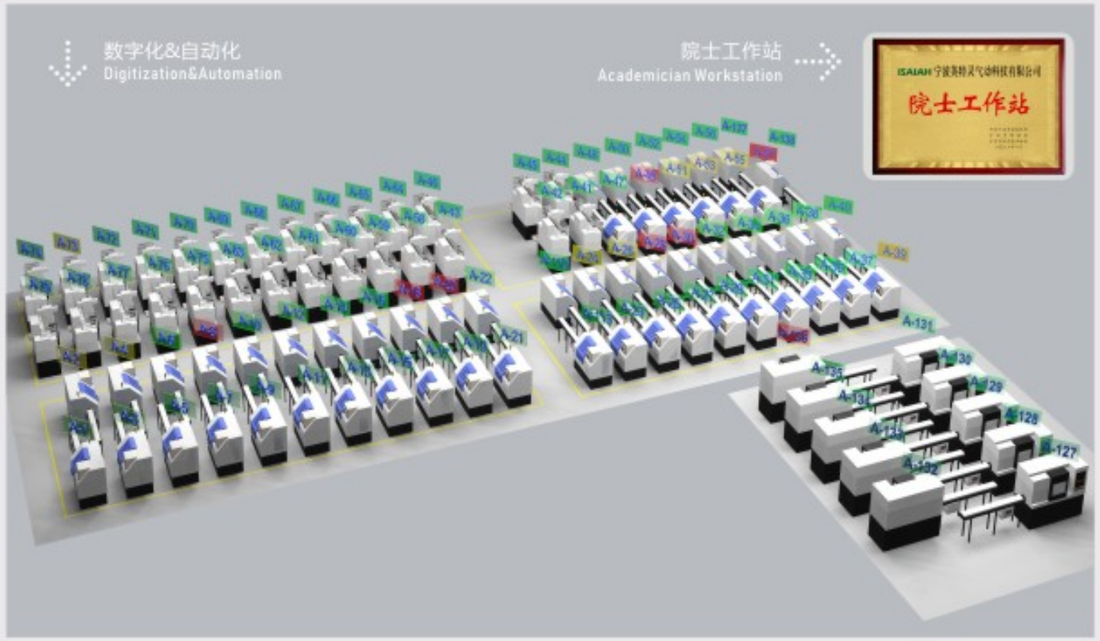

宁波英特灵气动科技有限公司
NingBo Intell Pneumatic Technology Co.,Ltd

Zhejiang Isaiah Industry Co., Ltd. is a leading manufacturer specializing in the development, production, sales, and service of high-end pneumatic components and precision connectors. Our company is located in Fenghua Area, Ningbo City, Zhejiang Province—a region renowned as the "pneumatic cluster demonstration base of China"—benefiting from a strategic location with convenient transportation and logistics.

Strong Capabilities and Excellent Products

Our company is rooted in manufacturing excellence, and has equipped with first-class production facilities and advanced manufacturing processes. It operates dozens of automated assembly lines and hundreds of modern processing equipment, ensuring efficient, reliable, and high-performance products. The sales network not only covers all provinces in China but also extends to more than 80 countries and regions worldwide.

Innovation-Driven and Strategic Upgrade

Since its establishment, our company has been committed to the mission of "Leading Innovation and Development in Fluid fittings." Through the continuous introduction of high-end automated equipment, optimization of core molds, deployment of professional talent, and upgrading of intelligent management systems, our company has significantly enhanced both product quality and production efficiency. Leveraging this internal momentum, it is successfully transitioning from traditional pneumatic fittings to high-precision, high-tech precision connectors, striving to provide stable and reliable fluid technology solutions for the global intelligent industry.

Company Culture and Core Values

- **Mission:** Leading innovation and development in fluid fittings.
- **Vision:** To build a supporting enterprise with strong competitiveness and cooperation designated by various industry benchmarks to provide cost-effective fulid fittings for global customer
- **Core Values:**

Development Concept	Innovation & Improvement	Efficiency Concept	Rigorous & Pragmatic
Quality Concept	Stable & Reliable	Personal Philosophy	Conscientious & Honest
Positioning Concept	Professional & Focus	Cooperative Concept	Co-creation & Sharing

Business Philosophy and Commitment

Guided by the business philosophy of "Innovating for Development, Improving Quality, Building Brands, and Sharing Success" we remain customer-centric, strive for satisfactory service, and honor every commitment. With a professional and focused approach, our company is dedicated to creating value and sharing achievements with global partners, jointly advancing the progress and development of the fluid transmission field.

ISO9001 ISO14001 ISO45001

部分产品获得以下认证：
Some products have the following certifications

TÜV NSF SGS CE RoHS REACH



ISAIAH

接头系列产品 Connecting Tube Fitting Series A

洁净接头
Clean Fittings 01
（主要应用于半导体行业）
（Mainly used in the Semiconductor Industry）

化学接头
Chemical Fittings 04
（主要应用于半导体行业、石油化工）
（Mainly used in the Semiconductor Industry and Petrochemical Industry）

阻燃接头及护套
Flame Retardant Fitting/ Flame Retardant Sheath 06
（主要应用于汽车行业）
（Mainly used in the Automotive Industry）

液压软管接头
Hydraulic Hose Fitting 09

节流阀
Speed Controls 11

» 通用型节流阀
Speed Controls 11

» 全铜型节流阀
Copper Speed Controls 14
（主要应用于汽车行业）
（Mainly used in the Automotive Industry）

» 不锈钢节流阀
StainlessSteel Speed Controls 16
（主要应用于食品生产、生命科学、新能源行业）
（Mainly used in Food Manufacturing, Life Sciences, and the New Energy Industry）

气控阀
Air Control Valve(QKF) 19

带节流消声器的快速排气阀
The Quick Exhaust Valves With Speed Control And Silencer 22

截止阀
Stop Fittings 24

» 通用型截止阀
Stop Fittings 24

» 不锈钢截止阀
Stainless Steel Stop Fittings 26

单向阀
Check Valves 27

» 通用型单向阀
Check Valves 27

» 不锈钢单向阀
Stainless Steel Check Valve 29

» 行业专用型单向阀
Industrial-Grade Check Valves 29
（主要应用于纺织机械）
（Mainly used in Textile Machinery）

手控阀门
Hand Valves 30

手滑阀
Hand Sliding Fittings 33

球阀
Ball Valves 34

压力指示接头
Pressure Indicator Fittings 36

快速排气阀
Quick Exhaust Fittings 37
（主要应用于木工机械）
（Mainly used in the Woodworking Machinery）

泄气接头
Deflated Fittings 37
（主要应用于纺织机械）
（Mainly used in Textile Machinery）

不锈钢快插式接头
Stainless Steel Fittings 38
（主要应用于新能源行业、半导体行业、化工、生命科学、食品生产）
（Mainly used in the New Energy Industry, Semiconductor Industry, Chemical Engineering, Life Sciences, and Food Production）

» 禁铜禁锌快插式接头SF系列
Copper/Zinc-free Specifications Quick Connecting Tube Fittings-SF Series 38

» 304/316L不锈钢快插接头系列
304/316L Stainless Steel Fittings Series 43

» 316L不锈钢快插S系列
316L Stainless Steel Fittings with S Series 46

目录
Catalogue

ISAIAH

接头系列产品 Connecting Tube Fitting Series A

快拧式不锈钢接头
Stainless Steel Push On Fittings 49
（主要应用于新能源行业、激光加工）
（Mainly used in the New Energy Industry and Laser Processing）

» 304/316不锈钢快拧接头系列
304/316 Stainless Steel Push On Fittings Series 49

» 316不锈钢快拧接头系列(带钢套结构)
316 Stainless Steel Push On Fittings Series 52
(Structure with steel sleeve)

全铜快插式接头
Push-in Fittings 54
（主要应用于汽车行业、储能行业、消防设施）
（Mainly used in the Automotive Industry, Energy Storage Industry, and Fire Protection Facilities）

» 常规型全铜快插接头
Push-in Fittings 54

» 卡簧式全铜快插接头
NT Series by Push-in Fittings with Spring 57

» AT系列全铜快插接头
Push-in Fittings with AT series 61

» DT系列全铜双密封快插接头
Push-in Fittings with DT series 65

» DOT认证型全铜快插接头
Brass Fittings with DOT series 67

» 塑料按钮全铜快插接头
Push-in Fittings 69

全铜快拧式接头
Push On Fittings 72
（主要应用于汽车行业、激光加工、模具制造）
（Mainly used in the Automotive Industry, Laser Processing, and Mold Manufacturing）

» 常规型全铜快拧接头
Push On Fittings 72

» 超小型迷你全铜快拧接头
Mini Compression Fittings 75

» 塑料压合型接头
Compression Fittings 76

卡套接头
Compression Fittings 77

» 全铜型卡套接头
Compression Fittings 77

» 316L不锈钢双卡接头
316L Stainless Steel Fittings with Double Ferrule 80
（主要应用于半导体行业、石油化工、国防军工）
（Mainly used in the Semiconductor Industry, Petrochemical Industry, and Defense Military Industry）

» 卡套接头阀类
Ferrule Valve Fittings 85

过渡接头
Transition Fittings 87

软管用接头
Pagoda Style Threaded Fittings 90

» 超小型不锈钢倒钩接头
Micro Stainless Steel Barbed Fittings 91

快插式真空阀岛接头
Push-In Vacuum Manifold Fitting 92
（主要应用于真空阀岛、多针阀岛）
（Mainly used in Vacuum Valve Manifold and Multi-pin Valve Manifold）

小孔接头
Fittings With Small Hole 93
（主要应用于纺织机械）
（Mainly used in Textile Machinery）

迷你快插接头
Mini Fittings 94
（主要应用于纺织机械、3C行业）
（Mainly used in Textile Machinery and 3C Industry）

超小型倒钩接头
Micro Barbed Fittings 97
（主要应用于纺织机械、3C行业）
（Mainly used in Textile Machinery and 3C Industry）

冷却系统用接头
Special Fittings For Cooling System 98

埋入式接头
Embedded Fittings 99
（主要应用于汽车行业）
（Mainly used in the Automotive Industry）

消声器
Silencers 100

通用型快插式气动管接头
Quick Connecting Tube Fittings 102

快换接头
Metal Couplers 114

ISAIAH

气管 Tube B

聚氨酯管
Pu Tube 116

聚氨脂阻燃管
Polyurethane Flame-retardant Tube 118

尼龙管
Nylon Tube 120

气管剪&气枪系列
Tube Cut & Air Gun 121

真空发生器 Vacuum Generator C

真空发生器
Vacuum Generator 123

IPZK2系列刀片式真空发生器
IPZK2 Series Compact Vacuum Generator 125

IVBM系列迷你多级真空发生器
IVBM Series Mini Multistage Vacuum Generator 128

IVM系列经典型多级真空发生器
IVM Series Multistage Vacuum Generator 130

真空过滤器
Vacuum Filter 132

数显压力开关 Digital Pressure Switch D

数显压力开关
Digital Pressure Switch 133

电气比例阀 Electro-Proportional Valve E

电气比例阀
Electro-Proportional Valve 134

气缸 Cylinders F

气缸
Cylinders 135

电磁阀 Solenoid Valve G

电磁阀、气控阀
Solenoid Valve、Pneumatic Control Valve 163

气源处理件 Air Treatment Unit H

气源处理件
Air Treatment Unit 169

缓冲器 Shock Absorber I

缓冲器
Shock Absorber 176

ISAIAH

快插式接头的基本结构
The Structure of the Quick Connecting Tube Fittings

连接气管时，应确保气管的切断端面成直角，管子的表面无裂纹及划痕；连接气管时，应往管接头内插入气管，应把管子末端完全插入到C，如不完全插到底则会存在泄漏的可能；连接好气管后，气管就会被卡簧锁死而不会脱落，并被密封圈密封住，从而不会泄漏；拆卸气管时，往下压椭圆形的释放环使卡簧完全张开后，抽出气管即可。

When connecting the tube, it should be ensured that the cut end face of the tube is at a right angle, and the surface of the tube is free of cracks and scratches; When connecting the tube, the tube should be inserted into the tube fitting, and the end of the tube should be fully inserted into C. If it is not fully inserted, there is a possibility of leakage; After connecting the tube, it will be locked in place by a spring and sealed with a sealing ring to prevent leakage; When disassembling the tube, press down on the oval sleeve to fully open the lock claws, Just pull out the tube.

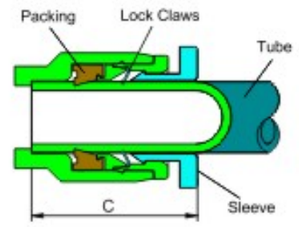

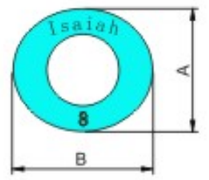

拆卸气管用释放环的尺寸
Size of the sleeve for dismntling the tube

与管接头相连接的气管公差见表三，如使用的气管断面为椭圆形，则推荐使用椭圆的长径与短径之差为0.2mm以内的气管，在连接气管后，如气管被过分的拉伸和弯曲，则对管接头有不好的影响，有可能会引起泄漏及安全问题，请根据下表进行作业。

The tolerance of the tube connected to the tube fitting is shown in Table 3. If the cross-section of the tube used is oval, it is recommended to use a tube with a difference of 0.2mm between the long and short diameters of the oval. After connecting the tube, if the tube is excessively stretched or bent, it may have a negative impact on the tube fitting and may cause leakage and safety issues. Please follow the table below for operation.

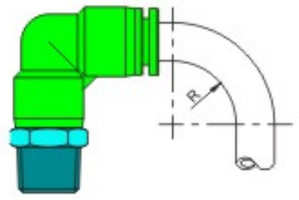

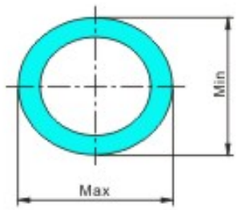

TubeSize	Standard Type							Compact Type			Standard Type					
	Φ4	Φ6	Φ8	Φ10	Φ12	Φ14	Φ16	Φ3	Φ4	Φ6	Φ5/32	Φ3/16	Φ1/4	Φ5/16	Φ3/8	Φ1/2
A	10.5	12.5	14	17	20.5	22	24	6.5	8	10	10.5	10.5	12.5	14	17	20.5
B	12	14	16	19.5	23	24.5	27	7.5	10	12	12	12	14	16	19.5	23

按气管尺寸分类的曲率半径
The Radius of Curvature for Tubing per Size

TubeSize	Standard Type							Compact Type			Standard Type					
	Φ4	Φ6	Φ8	Φ10	Φ12	Φ14	Φ16	Φ3	Φ4	Φ6	Φ5/32	Φ3/16	Φ1/4	Φ5/16	Φ3/8	Φ1/2
R	20	30	50	80	150	230	350	15	20	30	20	25	30	50	80	150

安全警告
WARNING

(1) 请勿使用空气和水以外的任何流体（某些型号可以用水）
(2) 在有火花的场合使用，请选用全金属接头或阻燃接头，以免引起火灾
(3) 在需要旋转的场合使用，请使用旋转型接头
(4) 在60°以上的高温环境中（水或热油）使用，请与本公司联系后再使用
(5) 在需要防静电的环境下使用，请与本公司联系后再使用，静电可能导致产品质量下降或引起故障
(6) 在接头上强加外部负荷（扭曲、弯曲、牵拉）有可能导致产品损坏或泄露

(1) Do not use any fluid other than air and water (some models may use water)
(2) When used in situations with sparks, please choose metal fittings and flame retardant fittings to avoid causing fires
(3) When used in situations where rotation is required, please use a rotary fitting
(4) For using in high temperature environments above 60 ° C (water or hot oil), please contact our company before using
(5) When used in an environment that requires anti-static measures, please contact our company before using. Static electricity may reduce product quality or lead to malfunctions
(6) Imposing external loads (twisting, bending, pulling) on the fitting may result in product damage or leakage

注意事项
CAUTION

1、在使用非本公司生产的气管（尼龙管或聚氨酯管），请先确认气管外径是否符合表3所示公差。
1、When using other company's tube (Nylon or PU tube), please confirm whether the outer diameter of the tubes suit for the tolerances shown in Table 3.

Size	Nylon Tube	Polyurethane Tube
Ø3mm	±0.08	±0.08
Ø4mm	±0.1	±0.1
Ø6mm	±0.1	±0.1
Ø8mm	±0.1	±0.1
Ø10mm	±0.15	±0.1
Ø12mm	±0.15	±0.1
Ø14mm	±0.15	±0.1
Ø16mm	±0.15	±0.1

Size	Nylon Tube	Polyurethane Tube
Ø1/8	±0.08	±0.08
Ø5/32	±0.1	±0.1
Ø3/16	±0.1	±0.1
Ø1/4	±0.1	±0.1
Ø5/16	±0.1	±0.1
Ø3/8	±0.15	±0.1
Ø1/2	±0.15	±0.1

表3 气管外径公差对照表。Table 3: Comparison Table of Outer Diameter Tolerance of tube.

2. 连接气管时的注意事项
(1) 插入气管前请先确认气管末端是否已经切成90°直角，气管表面无裂痕、划痕，并且没有变形为椭圆
(2) 插入气管时，为了防止泄露，请将气管末端完全插入到位
(3) 插入气管后，请确认气管不会被拉出
2. Cautions when connecting the tube
(1) Before inserting the tube, please confirm that the end of the tube has been cut at a 90 ° right angle, the surface of the tube is free of cracks, scratches, and has not deformed into an ellipse
(2) When inserting the tube, to prevent leakage, please fully insert the end of the tube into place
(3) After inserting the tube, please confirm that the tube will not be pulled out

3. 拆卸气管时注意事项
(1) 拆卸气管前请先确认气管内的压力为零，往下压椭圆形的释放环使卡簧完全张开后，抽出气管即可，如不完全压到位，则有可能管子无法拉出或刮伤管子，并且接头内将留下管子的刮屑
(2) 拆卸气管时，不要左右或360度旋转气管，如此气管有可能被卡簧划出沟槽，导致拉拔不出来
3. Cautions on disconnecting tube
(1) Before disconnecting tube, be sure to confirm that the pressure inside the tube is at 0. And Pull it out after pressing the sleeve equally on both sides Unequal pressing strength will make scratch on tube by insufficient open of lock claws, this will cause air leakage
(2) Be sure not to shake or make 360 degree rotation when disconnecting the tube. The scratch made by the misuses will cause air leakage

4. 安装连接体时的注意事项
(1) 安装连接体时，应使用合适的工具，通过接头的内六角或外六角将其紧固
(2) 紧固接头螺纹时，使用规定扭矩范围，使用高于规定值的扭矩会导致螺纹或垫圈变形，因而造成泄漏，使用低于规定值的扭矩会造成螺纹松动和泄漏
(3) 对于紧固后管道方向不会改变的接头，应在推荐扭矩内的范围内进行调整
4. Cautions on treatment of the equipment body:
(1) When fastening the body onto the six-angle part of the inside and outside of the fitting. Choose the correct tool and size
(2) When fastening the thread, please refer to the specified torque range. If torque is higher than the recommended, this may cause damage or air leakage. If torque is lower than the recommended, this may cause air leakage
(3) After fastening the Quick Connecting Tube Fitting, the direction of it won't be changed. If adjusting, please refer to the range of the torque

螺丝紧固力矩参考值：
The reference value of screw fastening torque:

单位：N.m(牛顿.米)
Unit: Nm (Newton.m)

联接螺纹 Connect screw thread	紧固扭矩 Tighten torque	联接螺纹 Connect screw thread	紧固扭矩 Tighten torque	联接螺纹 Connect screw thread	紧固扭矩 Tighten torque
M3	0.3~0.6	PT1/4	12.0~14.0	PT3/4	28.0~30.0
M5	1.0~1.5	PT3/8	22.0~24.0	PT1	36.0~40.0
PT1/8	7.0~9.0	PT1/2	28.0~30.0		

5. 拆卸连接体的注意事项
(1) 拆卸连接体时，通过接头的内六角或外六角通过合适的工具将其拆卸
(2) 拆卸后将配对设备上的螺纹胶清理干净，残留的螺纹胶会进入周边设备并造成故障
5. Cautions on disconnecting the equipment body
(1) When disconnecting the body onto the six-angle part of the inside and outside of the fitting. Choose the correct tool and size
(2) After disconnecting the body, please clean the thread glue on equipment, otherwise the remaining thread glue will enter the equipment and cause damage



主要应用于半导体行业
Mainly used inthe Semiconductor Industry

订购号 / Order

IP L 08 - 01 - □ - □ - CN

⑦ 洁净规格代码/Clean specification Code

⑥ 塑料体颜色/Color

代号/Code	A	A	空白/Blank
类别/Series	IP	SF	PP
颜色/Color	灰/Grey	灰/Grey	透明/Transparent

⑤ 密封件材质/Sealing Material

代号/Code	空白/Blank	EPDM	FKM
材质/ Material	NBR	EPDM	FKM

④ 螺纹尺寸/Thread Size

	类制锥管螺纹/Taper Pipe Thread			
代号/Code	01	02	03	04
尺寸/Size	R1/8	R1/4	R3/8	R1/2

*PP系列产品锥管螺纹处无螺纹密封胶
*IP和SF系列产品锥管螺纹处默认涂有螺纹密封胶
*PP series products have no thread sealant at the taper pipe threads
*IP and SF series products are coated with thread sealant by default at the taper pipe threads

③ 管径/ Tube Outer Diameter

	公制/Metric Size				
代号/Code	04	06	08	10	12
气管外径/Tube Outer Diameter(mm)	Φ4	Φ6	Φ8	Φ10	Φ12

② 形状/Shape

① 类别/Series

代号/Code	IP	SF	PP
类别/Series	树脂/Resin: PBT/POM 金属/Metal: 镀镍铜/Nickel plated brass	树脂/Resin: PBT/POM 金属/Metal: SUS304	树脂/Resin: PP 金属/Metal: SUS304

如需其他规格，可咨询联系
If you need other specification, please contact us

特点 / Features （PP系列）

- 适用于洁净室内的驱动类空气系统的快插式管接头
- 产品不添加任何油脂
- 此系列产品在净化室（千级）内进行清洗和包装
- Quick Connecting Tube Fittings suitable for driving air systems in cleanrooms
- The product does not add any grease
- This series of products are cleaned and packaged in a cleanroom (ISO Class 6)

技术参数 / Specifications

使用流体 / Fluid	空气 /Air
使用压力范围 / Operating Pressure	0~1.0MPa（150psi）
负压 / Negative Pressure	-100Kpa（-29.5 in·Hg）
使用温度范围 / Operating Temperature	-20~80℃

⊖PISC



MODEL		
PISC04-M5(B)-CN	PISC06-03(B)-CN	PISC10-02(B)-CN
PISC04-01(B)-CN	PISC08-01(B)-CN	PISC10-03(B)-CN
PISC06-M5(B)-CN	PISC08-02(B)-CN	PISC10-04(B)-CN
PISC06-01(B)-CN	PISC08-03(B)-CN	PISC12-03(B)-CN
PISC06-02(B)-CN	PISC08-04(B)-CN	PISC12-04(B)-CN

⊖PPC



MODEL			
PPC04-01-CN	PPC04-02-CN	PPC04-03-CN	PPC04-04-CN
PPC06-01-CN	PPC06-02-CN	PPC06-03-CN	PPC06-04-CN
PPC08-01-CN	PPC08-02-CN	PPC08-03-CN	PPC08-04-CN
PPC10-02-CN	PPC10-03-CN	PPC10-04-CN	PPC12-02-CN
PPC12-03-CN	PPC12-04-CN		

⊖PPD



MODEL			
PPD04-01-CN	PPD04-02-CN	PPD04-03-CN	PPD04-04-CN
PPD06-01-CN	PPD06-02-CN	PPD06-03-CN	PPD06-04-CN
PPD08-01-CN	PPD08-02-CN	PPD08-03-CN	PPD08-04-CN
PPD10-02-CN	PPD10-03-CN	PPD10-04-CN	PPD12-02-CN
PPD12-03-CN	PPD12-04-CN		

⊖PPL



MODEL			
PPL04-01-CN	PPL04-02-CN	PPL04-03-CN	PPL04-04-CN
PPL06-01-CN	PPL06-02-CN	PPL06-03-CN	PPL06-04-CN
PPL08-01-CN	PPL08-02-CN	PPL08-03-CN	PPL08-04-CN
PPL10-02-CN	PPL10-03-CN	PPL10-04-CN	PPL12-02-CN
PPL12-03-CN	PPL12-04-CN		

⊖PPX



MODEL			
PPX04-01-CN	PPX04-02-CN	PPX04-03-CN	PPX04-04-CN
PPX06-01-CN	PPX06-02-CN	PPX06-03-CN	PPX06-04-CN
PPX08-01-CN	PPX08-02-CN	PPX08-03-CN	PPX08-04-CN
PPX10-02-CN	PPX10-03-CN	PPX10-04-CN	PPX12-02-CN
PPX12-03-CN	PPX12-04-CN		

⊖PPB



MODEL			
PPB04-01-CN	PPB04-02-CN	PPB04-03-CN	PPB04-04-CN
PPB06-01-CN	PPB06-02-CN	PPB06-03-CN	PPB06-04-CN
PPB08-01-CN	PPB08-02-CN	PPB08-03-CN	PPB08-04-CN
PPB10-02-CN	PPB10-03-CN	PPB10-04-CN	PPB12-02-CN
PPB12-03-CN	PPB12-04-CN		

⊖PPY



MODEL			
PPY04-CN	PPY08-CN	PPY12-CN	
PPY06-CN	PPY10-CN		

⊖PPU



MODEL			
PPU04-CN	PPU08-CN	PPU12-CN	
PPU06-CN	PPU10-CN		

⊖PPE



MODEL			
PPE04-CN	PPE08-CN	PPE12-CN	
PPE06-CN	PPE10-CN		

⊖PPV



MODEL			
PPV04-CN	PPV08-CN	PPV12-CN	
PPV06-CN	PPV10-CN		



主要应用于半导体行业、石油化工
Mainly used in the Semiconductor Industry and Petrochemical Industry

订购号 / Order

PPSC 06 - 01

① 型号/Model

② 管径/ Tube Outer Diameter

	公制/Metric Size	
代号/Code	04	06
气管外径/Tube Outer Diameter(mm)	Φ4	Φ6

③ 螺纹尺寸/Thread Size

	英制锥管螺纹/Taper Pipe Thread	
代号/Code	01	02
尺寸/Size	R1/8	R1/4

特点 / Features

- 全树脂制，无金属离子，耐化学性良好
- 无油设计，适用于食品行业
- 轻量化设计，重量约为普通接头的1/3

- Fully resin-made, free of metal ions, with excellent chemical resistance
- Oil-free design, suitable for the food industry
- Lightweight design, weighing approximately 1/3 of normal fittings

技术参数 / Specifications

使用流体 / Fluid	空气、水、其他化学药剂 / Air, Water, and other chemical agents
使用压力范围 / Operating Pressure	0.9MPa（建议温度0～20℃）/ (Recommended temperature range of 0-20 ℃)
负压 / Negative Pressure	-100Kpa
使用温度范围 / Operating Temperature	0～80℃（不可冻结）/ (Non freezing)

注：当使用流体为水以及其他药剂时，请务必遵守以下条件规则：
1.使用水以及其他液体时，请把波动压力控制在最大压力范围以下
2.使用水以及其他液体时，请必须使用插入环
3.使用化学药品，混合气体时，使用规格会根据实际条件发生变化请确认条件后使用

Note: When using fluids such as water and other chemical agents, the following conditions must be strictly followed.
1.When using water and other liquids, please control the fluctuation pressure below the maximum pressure range
2.When using water and other liquids, an insertion ring must be used
3. When using chemicals or mixed gases, the specifications may change according to actual conditions. Please confirm the conditions before use



插入环
Insertion Ring

⊖PPSC



MODEL			
PPSC04-01	PPSC04-02	PPSC06-01	PPSC06-02

⊖PPSL



MODEL			
PPSL04-01	PPSL04-02	PPSL06-01	PPSL06-02

⊖PPSY



MODEL			
PPSY04			



订购号 / Order

IPC 06 - 01 - V

① 类别/Series

② 管径/ Tube Outer Diameter

	公制/Metric Size			
代号/Code	06	08	10	12
气管外径/Tube Outer Diameter(mm)	Φ6	Φ8	Φ10	Φ12

③ 螺纹尺寸/Thread Size

	英制锥管螺纹/Taper Pipe Thread				英制直管螺纹/G Thread				公制螺纹/Mertric Thread
代号/Code	01	02	03	04	G01	G02	G03	G04	M5
尺寸/Size	R1/8	R1/4	R3/8	R1/2	G1/8	G1/4	G3/8	G1/2	M5X0.8

特点 / Features

- 适用于气动管类系统的阻燃型快速装配接头
- 使用阻燃性PBT，阻燃等级为UL94 V-0
- 在焊接生产线等使用现场，可防止接头延烧事故

- Flame retardant quick assembly fittings suitable for pneumatic piping systems
- Using flame retardant PBT with a flame retardant rating of UL94 V-0
- In welding production lines and other usage sites, it can prevent joint burning accidents

阻燃快插接头
Flame Retardant Fittings

技术参数 / Specifications

使用流体 / Fluid	空气，真空/Air ,Vacuum
使用压力范围 / Operating Pressure	0~1.0MPa（150psi）
负压 / Negative Pressure	-100Kpa（-29.5 in·Hg）
耐压 / Max Pressure	1.5MPa
使用温度范围 / Operating Temperature	-20~70℃(-4~158°F)

结构图 / Structure Chart

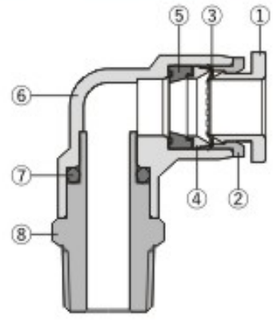

编号	名称	材质
1	按钮(Sleeve)	聚酮亚胺(POK)
2	锌套(Collar)	锌合金(ZINC)
3	簧片(Lock Claws)	不锈钢(SUS)
4	压环(Back Ring)	聚甲醛(POM)
5	密封圈(Packing)	丁腈橡胶(NBR)
6	塑料体(Resin Body)	阻燃聚对苯二甲酸丁二醇脂(PBT-V0)
7	O型圈(O-Ring)	丁腈橡胶(NBR)
8	铜体(Metal Body)	镀镍铜(Brass)

阻燃调速接头
Flame Retardant Speed Controls

技术参数 / Specifications

使用流体/Fluid	空气/Air
使用压力范围/Operating Pressure	0.1~1.0MPa（15~150psi）
耐压/Max Pressure	1.5MPa
使用温度范围/Operating Temperature	-20~70℃(-4~158°F)

结构图 / Structure Chart

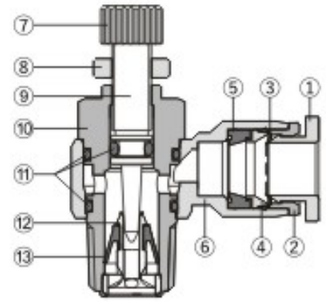

编号	名称	材质
1	按钮(Sleeve)	聚酮亚胺(POK)
2	锌套(Collar)	锌合金(ZINC)
3	簧片(Lock Claws)	不锈钢(SUS)
4	压环(Back Ring)	聚甲醛(POM)
5	密封圈(Packing)	丁腈橡胶(NBR)
6	塑料体(Resin Body)	阻燃聚对苯二甲酸丁二醇脂(PBT-V0)
7	调节轮(Needle)	镀镍铜(Brass)
8	锁紧轮(Lock Nut)	镀镍铜(Brass)
9	阀杆(Valve rod)	黄铜(Brass)
10	阀体(Metal Body)	镀镍铜(Brass)
11	O型圈(O-Ring)	丁腈橡胶(NBR)
12	阀芯(N-Holder)	镀镍铜(Brass)
13	单向密封圈(H-Packing)	丁腈橡胶(NBR)

阻燃护套
Flame Retardant Sheath



型号 / Model
FRT06 / 08 / 10 / 12

结构图 / Structure Chart

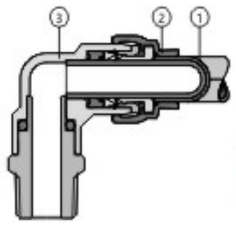

①阻燃管/Flame-Retardant Tube
②阻燃护套/Flame Retardant Sheath
③阻燃接头/Flame Retardant Fitting

⊖IPC-V螺纹直通



MODEL			
IPC06-M5-V	IPC08-01-V	IPC10-01-V	IPC12-02-V
IPC06-01-V	IPC08-02-V	IPC10-02-V	IPC12-03-V
IPC06-02-V	IPC08-03-V	IPC10-03-V	IPC12-04-V
IPC06-03-V	IPC08-04-V	IPC10-04-V	

⊖IPC-G-V螺纹直通-G螺纹



MODEL			
IPC06-G01-V	IPC08-G02-V	IPC10-G02-V	IPC12-G03-V
IPC06-G02-V	IPC08-G03-V	IPC10-G03-V	IPC12-G04-V
IPC06-G03-V	IPC08-G04-V	IPC10-G04-V	
IPC08-G01-V	IPC10-G01-V	IPC12-G02-V	

⊖IPL-V L型螺纹弯头



MODEL			
IPL06-M5-V	IPL08-01-V	IPL10-01-V	IPL12-02-V
IPL06-01-V	IPL08-02-V	IPL10-02-V	IPL12-03-V
IPL06-02-V	IPL08-03-V	IPL10-03-V	IPL12-04-V
IPL06-03-V	IPL08-04-V	IPL10-04-V	

⊖IPL-G-V L型螺纹弯头-G螺纹



MODEL			
IPL06-G01-V	IPL08-G02-V	IPL10-G02-V	IPL12-G03-V
IPL06-G02-V	IPL08-G03-V	IPL10-G03-V	IPL12-G04-V
IPL06-G03-V	IPL08-G04-V	IPL10-G04-V	
IPL08-G01-V	IPL10-G01-V	IPL12-G02-V	

⊖IPY-V Y三通



MODEL			
IPY06-V	IPY10-V	IPY08-06-V	IPY12-10-V
IPY08-V	IPY12-V	IPY10-08-V	

⊖IPE-V 正三通



MODEL			
IPE06-V	IPE10-V	IPE08-06-08-V	IPE12-10-12-V
IPE08-V	IPE12-V	IPE10-08-10-V	

⊖IPU-V直二通



MODEL			
IPU06-V	IPU10-V	IPU08-06-V	IPU12-10-V
IPU08-V	IPU12-V	IPU10-08-V	

⊖ISC-V节流阀



MODEL			
ISC06-M5-V	ISC08-01-V	ISC10-01-V	ISC12-02-V
ISC06-01-V	ISC08-02-V	ISC10-02-V	ISC12-03-V
ISC06-02-V	ISC08-03-V	ISC10-03-V	ISC12-04-V
ISC06-03-V	ISC08-04-V	ISC10-04-V	

⊖ISC-G-V节流阀



MODEL			
ISC06-G01-V	ISC08-G02-V	ISC10-G02-V	ISC12-G03-V
ISC06-G02-V	ISC08-G03-V	ISC10-G03-V	ISC12-G04-V
ISC06-G03-V	ISC08-G04-V	ISC10-G04-V	
ISC08-G01-V	ISC10-G01-V	ISC12-G02-V	



订购号 / Order

LC C3 82 - 6 - 6 - K

⑥挡圈类别/Retaining ring

代码/Code	空白/Standard	K
挡圈类别 Retaining ring	带塑料挡圈 With plastic retaining ring	不带塑料挡圈 Without plastic retaining ring

⑤ 软管内径规格/Inner diameter

代码/Code	4	6	8	10	12
DN软管内径/DN inner diameter	6	10	12	16	20
Inch软管内径/Inch inner diameter	1/4	3/8	1/2	5/8	3/4

④ 螺纹口径/Threaded interface

系列类型 Series Type	代码/Code	2	4	6	8	10	12	15	18	22	28
C3/CA	公制螺纹/Metric thread			M12X1.5	M14X1.5	M16X1.5	M18X1.5	M22X1.5	M26X1.5	M30X2	M36X2
06	美制螺纹UNF/UNF thread		7/16-20	9/16-18	3/4-16	7/8-16	1-1/16-26				
92	英制螺纹G/G thread		1/4-19	3/8-19	1/2-14	5/8-14	3/4-14				
01	美制螺纹NPTF/NPTF thread	1/8-27	1/4-18	3/8-18	1/2-14		3/4-14				

③ 适用软管/Applicable Tube

82	801 / 804 / 821FR / 830M / 831 / 836 / 837BM / 837PU-Plus / 838M

Push-look低压软管/ Push-look low-pressure hoses

② 系列代码/Series

代码/Code	C3	CA	92	06	01
名称 Name	公制内螺纹球头型 Metric Female Ball seat	公制内螺纹24度锥面带O型圈 Metric Female 24°Cone with O-ring	英制内螺纹60度锥密封型 Female NPT 60°Tapered Seal	美制内螺纹双角度扩口型 Female 37°Flare Fitting	NPTF外螺纹型 Male NPTF
					

① 软管接头型号/Model

特点 / Features

- 软管接头采用快速装拆设计，能轻松安装及便于维修更换。
- 此系列软管接头仅适用于PARKER公司生产的Push-look低压软管。
- 产品仅用于低压场合，具体工作压力取决于使用软管规格。
- 应用于液压和润滑系统等多种场合，特别是在需要快速简便组装的环境中表现出色。

- The hose Fitting adopts a quick-release design, enabling easy installation and convenient maintenance or replacement.
- This series of hose fittings is only applicable to the "Push-look" low-pressure hoses manufactured by PARKER Company.
- The product is only suitable for low-pressure applications, and the specific working pressure depends on the specifications of the hose used.
- Applied in various situations such as hydraulic and lubrication systems, especially in environments that require quick and easy assembly, it performs well

⊖LCCA公制内螺纹24度锥面带O型圈



MODEL			
LCCA82-6-4	LCCA82-10-6	LCCA82-15-8	LCCA82-22-12
LCCA82-8-4	LCCA82-12-6	LCCA82-18-10	

⊖LCC3公制内螺纹球头型



MODEL			
LCC382-6-4	LCC382-10-6	LCC382-15-8	LCC382-22-12
LCC382-8-4	LCC382-12-6	LCC382-18-10	LCC382-28-16

⊖LC92英制内螺纹60度锥密封型



MODEL			
LC9282-4-4	LC9282-8-8	LC9282-12-12	
LC9282-6-6	LC9282-10-10		

⊖LC06美制内螺纹双角度扩口型



MODEL			
LC0682-4-4	LC0682-8-8	LC0682-12-12	
LC0682-6-6	LC0682-10-10		

⊖LC01 NPTF外螺纹型



MODEL			
LC0182-2-4	LC0182-6-6	LC0182-8-8	LC0182-12-10
LC0182-4-4	LC0182-6-8	LC0182-8-10	LC0182-12-12
LC0182-4-6	LC0182-8-6	LC0182-12-8	

通用型节流阀
Speed Controls



订购号 / Order

IS C 06 - 01 □ □ - □

⑦ 颜色/Color

⑤ 控制方式/Control Way

代号/Code	空白/Blank	B
控制方式/Control Way	排气节流/Exhaust Control out	进气节流/Entering air Control in
符号/Type		

⑤ 超小型/Compact

代号/Code	空白/Blank	C
尺寸/Size	常规 Standard	超小型 Compact

④ 螺纹尺寸/Thread Size;

	英制锥管螺纹/Taper Pipe Thread				英制直管螺纹/G Thread				公制螺纹/Metric Thread		美制锥管螺纹/American Taper Pipe Thread			
代号/Code	01	02	03	04	G01	G02	G03	G04	M3	M5	N01	N02	N03	N04
尺寸/Size	R1/8	R1/4	R3/8	R1/2	G1/8	G1/4	G3/8	G1/2	M3X0.5	M5X0.8	NPT1/8	NPT1/4	NPT3/8	NPT1/2

③ 管径/ Tube Outer Diameter

	公制/Metric Size					英制/Inch Size				
代号/Code	04	06	08	10	12	5/32	1/4	5/16	3/8	1/2
气管外径/Tube Outer Diameter(mm)	Φ4	Φ6	Φ8	Φ10	Φ12	Φ5/32	Φ1/4	Φ5/16	Φ3/8	Φ1/2

② 种类/Form

代号/Code	C	CT	U	S	CW	CA	CAT	CD	UW
种类/Form	标准型 Standard	全铜 Metal	管道型 Union	万向型 With Swiveling	带锁型 With Lock	无调节轮型 Without Handwheel	全铜无调节轮型 Metal Without Handwheel	大流量型 Large Flow	带锁管道阀 With Lock Pipeline Valve

① 类别/Series

代号/Code	IS	IN	IBS
类别/Series	常规&全铜 / Common&Metal	双向节流 / Two-Way Controls	快拧 / Push On Fittings

特点 / Features

- 用于控制驱动设备的运行速度
- 由于塑料体与接头体的旋转，所以引出方向是自由

- Used to control the speed of the working equipment
- Because of the resin body and metal body rotation lead to the direction is free

结构图 / Structure Chart

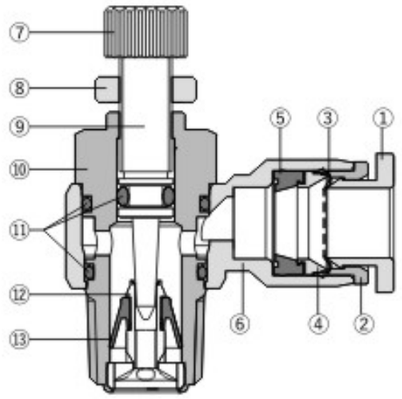

技术参数 / Specifications

使用流体/Fluid	空气，真空/Air,Vacuum
使用压力范围/Operating Pressure	0.1~1.0MPa(15~150psi)
耐压/Max Pressure	1.5MPa(225psi)
使用环境及流体温度/Operating Temperature	-20~70℃(-4~158°F)
适用软管/Applicable Tube	PU及尼龙管/Polyurethane and Nylon

序号	名称	材质
1	按钮(Sleeve)	聚甲醛(POM)
2	锌套(Collar)	锌合金(ZINC)
3	簧片(Lock Claws)	不锈钢(SUS)
4	压环(Back Ring)	聚甲醛(POM)
5	密封圈(Packing)	丁腈橡胶(NBR)
6	塑料体(Resin Body)	聚对苯二甲酸丁二醇脂(PBT)
7	调节轮(Needle)	镀镍铜/铝(Brass/6061)
8	锁紧轮(Lock Nut)	镀镍铜(Brass)
9	阀杆(Valve rod)	黄铜(Brass)
10	阀体(Metal Body)	镀镍铜(Brass)
11	O型圈(O-Ring)	丁腈橡胶(NBR)
12	阀芯(N-Holder)	镀镍铜(Brass)
13	单向密封圈(H-Packing)	丁腈橡胶(NBR)

⊖ISCW带锁节流阀

With lock



MODEL			
ISCW04-M3(B)	ISCW06-01(B)	ISCW08-02(B)	ISCW10-04(B)
ISCW04-M5(B)	ISCW06-02(B)	ISCW08-03(B)	ISCW12-03(B)
ISCW04-01(B)	ISCW06-03(B)	ISCW10-02(B)	ISCW12-04(B)
ISCW06-M5(B)	ISCW08-01(B)	ISCW10-03(B)	

⊖ISCW-G带锁节流阀

With lock



MODEL			
ISCW04-G01(B)	ISCW08-G01(B)	ISCW10-G02(B)	ISCW12-G03(B)
ISCW06-G01(B)	ISCW08-G02(B)	ISCW10-G03(B)	ISCW12-G04(B)
ISCW06-G02(B)	ISCW08-G03(B)	ISCW10-G04(B)	

⊖ISC节流阀标准型



MODEL				
ISC04-M3(B)	ISC06-M5(B)	ISC08-M5(B)	ISC10-01(B)	ISC12-02(B)
ISC04-M5(B)	ISC06-01(B)	ISC08-01(B)	ISC10-02(B)	ISC12-03(B)
ISC04-01(B)	ISC06-02(B)	ISC08-02(B)	ISC10-03(B)	ISC12-04(B)
ISC04-02(B)	ISC06-03(B)	ISC08-03(B)	ISC10-04(B)	
ISC06-M3(B)	ISC06-04(B)	ISC08-04(B)	ISC12-01(B)	

⊖ISC-G节流阀标准型-G螺纹



MODEL				
ISC04-G01(B)	ISC06-G04(B)	ISC10-G01(B)	ISC12-G02(B)	
ISC04-G02(B)	ISC08-G01(B)	ISC10-G02(B)	ISC12-G03(B)	
ISC06-G01(B)	ISC08-G02(B)	ISC10-G03(B)	ISC12-G04(B)	
ISC06-G02(B)	ISC08-G03(B)	ISC10-G04(B)		
ISC06-G03(B)	ISC08-G04(B)	ISC12-G01(B)		

⊖ISCA节流阀

Internally Adjustable



MODEL				
ISCA04-M5(B)	ISCA06-01(B)	ISCA08-01(B)	ISCA10-01(B)	ISCA12-02(B)
ISCA04-01(B)	ISCA06-02(B)	ISCA08-02(B)	ISCA10-02(B)	ISCA12-03(B)
ISCA04-02(B)	ISCA06-03(B)	ISCA08-03(B)	ISCA10-03(B)	ISCA12-04(B)
ISCA06-M5(B)	ISCA06-04(B)	ISCA08-04(B)	ISCA10-04(B)	

⊖ISCA-G节流阀-G螺纹

Internally Adjustable



MODEL				
ISCA04-G01(B)	ISCA04-G02(B)	ISCA06-G01(B)	ISCA06-G02(B)	ISCA06-G03(B)
ISCA06-G04(B)	ISCA08-G01(B)	ISCA08-G02(B)	ISCA08-G03(B)	ISCA08-G04(B)
ISCA10-G01(B)	ISCA10-G02(B)	ISCA10-G03(B)	ISCA10-G04(B)	ISCA12-G02(B)
ISCA12-G03(B)	ISCA12-G04(B)			

⊖ISS自由旋转型

Freely-Rotating



MODEL				
ISS04-M5(B)	ISS06-M5(B)	ISS08-01(B)	ISS10-02(B)	ISS12-03(B)
ISS04-01(B)	ISS06-01(B)	ISS08-02(B)	ISS10-03(B)	
ISS04-02(B)	ISS06-02(B)	ISS10-01(B)	ISS12-02(B)	

⊖ISS-G自由旋转型-G螺纹

Freely-Rotating



MODEL				
ISS04-G01(B)	ISS06-G02(B)	ISS10-G02(B)	ISS12-G03(B)	
ISS04-G02(B)	ISS08-G01(B)	ISS10-G03(B)		
ISS06-G01(B)	ISS08-G02(B)	ISS12-G02(B)		

⊖ISCD大流量节流阀

Large-Flow



MODEL				
ISCD04-M5	ISCD06-M5	ISCD06-01	ISCD06-02	ISCD08-01
ISCD08-02				

⊖ISCD-G大流量节流阀-G螺纹

Large-Flow



MODEL				
ISCD06-G01	ISCD06-G02	ISCD08-G01	ISCD08-G02	

⊖ISC04-M5C迷你节流阀

Mini



MODEL			
ISC04-M5C			

⊖ISS自由旋转型

Free Rotation



MODEL			
ISS1/4-N01(B)	ISS5/16-N01(B)	ISS3/8-N02(B)	ISS1/2-N02(B)
ISS1/4-N02(B)	ISS5/16-N02(B)	ISS3/8-N03(B)	ISS1/2-N03(B)

⊖ISU管道阀



MODEL			
ISU04	ISU06	ISU08	ISU10
ISU12			
ISU1/2	ISU1/4	ISU3/8	ISU3/16
ISU5/16	ISU5/32		

⊖INU管道阀

Bidirectional



MODEL			
INU04	INU06	INU08	INU10
INU12			

ISC-N节流阀标准型-NPT螺纹



MODEL				
ISC5/32-U10(B)	ISC1/4-U10(B)	ISC5/16-N01(B)	ISC3/8-N02(B)	ISC1/2-N04(B)
ISC5/32-N01(B)	ISC1/4-N01(B)	ISC5/16-N02(B)	ISC3/8-N03(B)	
ISC3/16-U10(B)	ISC1/4-N02(B)	ISC5/16-N03(B)	ISC3/8-N04(B)	
ISC3/16-N01(B)	ISC1/4-N03(B)	ISC5/16-N04(B)	ISC1/2-N02(B)	
ISC3/16-N02(B)	ISC1/4-N04(B)	ISC3/8-N01(B)	ISC1/2-N03(B)	

INC双向节流阀

Bidirectional



MODEL				
INC04-M3	INC06-01	INC08-01	INC10-02	INC12-03
INC04-M5	INC06-02	INC08-02	INC10-03	INC12-04
INC04-01	INC06-03	INC08-03	INC10-04	
INC04-02	INC06-04	INC08-04	INC12-01	
INC06-M5	INC08-M5	INC10-01	INC12-02	

全铜型节流阀
Copper Speed Controls

主要应用于汽车行业
Mainly used in the Automotive Industry

ISCT全铜节流阀标准型

MODEL			
ISCT04-01	ISCT06-03	ISCT08-04	ISCT10-04
ISCT04-02	ISCT08-01	ISCT10-01	
ISCT06-01	ISCT08-02	ISCT10-02	
ISCT06-02	ISCT08-03	ISCT10-03	

ISCT-G全铜节流阀标准型-G螺纹

MODEL			
ISCT04-M5	ISCT06-G01	ISCT08-G02	ISCT10-G02
ISCT04-G01	ISCT06-G02	ISCT08-G03	ISCT10-G03
ISCT04-G02	ISCT06-G03	ISCT08-G04	ISCT10-G04
ISCT06-M5	ISCT08-G01	ISCT10-G01	

ISCAT全铜内调式节流阀

Internally Adjustable



MODEL			
ISCAT04-M5	ISCAT06-M5	ISCAT08-01	ISCAT10-02
ISCAT04-01	ISCAT06-01	ISCAT08-02	ISCAT10-03
ISCAT04-02	ISCAT06-02	ISCAT10-01	

ISCAT-G快插系列

Internally Adjustable



MODEL			
ISCAT06-G01	ISCAT08-G02	ISCAT10-G01	ISCAT10-G04
ISCAT06-G02	ISCAT08-G03	ISCAT10-G02	ISCAT12-G04
ISCAT08-G01	ISCAT08-G04	ISCAT10-G03	

IBSC快拧节流阀



MODEL				
IBSC04-01	IBSC06-02	IBSC08-02	IBSC10-03	IBSC12-04
IBSC04-02	IBSC06-03	IBSC08-03	IBSC10-04	
IBSC06-01	IBSC08-01	IBSC10-02	IBSC12-03	

IBSC-G快拧节流阀-G螺纹



MODEL				
IBSC04-M5	IBSC06-M5	IBSC08-G01	IBSC10-G02	IBSC12-G03
IBSC04-G01	IBSC06-G01	IBSC08-G02	IBSC10-G03	IBSC12-G04
IBSC04-G02	IBSC06-G02	IBSC08-G03	IBSC10-G04	

ISCT全铜螺纹式节流阀



MODEL			
ISCT-G01	ISCT-G04	ISCTG01-01	ISCTG04-04
ISCT-G02		ISCTG02-02	
ISCT-G03		ISCTG03-03	

ISCAT-G全铜内调式节流阀

Internally Adjustable



MODEL			
ISCAT-M3	ISCAT-G02	ISCATG01-01	ISCATG04-04
ISCAT-M5	ISCAT-G03	ISCATG02-02	
ISCAT-G01	ISCAT-G04	ISCATG03-03	

ISUW带锁管道阀

New

With Lock



MODEL			
ISUW04	ISUW06	ISUW08	ISUW10
ISUW12			

ISU04C管道阀

Mini



MODEL			
ISU04C			

不锈钢节流阀
StainlessSteel Speed Controls



主要应用于食品生产、生命科学、新能源行业
Mainly used in Food Manufacturing, Life Sciences, and the New Energy Industry

订购号 / Order

SF SC 06 - 01 □ - □ - □

⑦ 颜色（仅适用于类别SF类产品）
Color(Applicable Category SF Product)

⑥ (仅适用于类别不锈钢304和禁铜SF类产品)
(Applicable Category SUS304 and SF Product)

代号/Code	SC	SL	GT	空白/Blank
材质 Material	全不锈钢304 SUS304	全不锈钢316L SUS316L	SF类（锁紧套不锈钢304） SF（SUS304 For Collar）	其他类 Other

⑤ 控制方式/Control Way

代号/Code	空白/Blank	B
控制方式/Control Way	排气节流/Exhaust Control out	进气节流/Entering air Control in
符号/Type		

④ 螺纹尺寸/Thread Size;

	英制锥管螺纹/Taper Pipe Thread				英制直管螺纹/G Thread				公制螺纹/Mertric Thread	
代号/Code	01	02	03	04	G01	G02	G03	G04	M3	M5
尺寸/Size	R1/8	R1/4	R3/8	R1/2	G1/8	G1/4	G3/8	G1/2	M3X0.5	M5X0.8

③ 管径/ Tube Outer Diameter

	公制/Metric Size				
代号/Code	04	06	08	10	12
气管外径/Tube Outer Diameter(mm)	Φ4	Φ6	Φ8	Φ10	Φ12

② 种类/Form

代号/Code	SC	SS	SU	CW	UW
种类/Form	标准型/Standard	万向型/With Swiveling	管道型/Union	带锁型/With Lock	带锁管道阀/With Lock Pipeline Valve

① 类别/Series

代号/Code	I	SF
类别/Series	全不锈钢/Stainless Steel	不锈钢禁铜类/Stainless Steel Copper-free

特点 / Features

- 用于控制驱动设备的运行速度
- 由于塑料体与接头体的旋转，所以引出方向是自由
- Used to control the speed of the working equipment
- Because of the plastic body and metal body rotation lead to the direction is free

结构图 / Structure Chart

禁铜不锈钢类节流阀SF系列

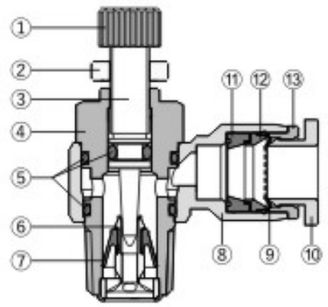

全不锈钢节流阀系列

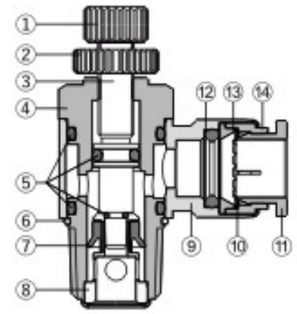

技术参数 / Specifications

使用流体/Fluid	空气/Air
使用压力范围/Operating Pressure	0.1~1.0MPa(15~150psi)
耐压/Max Pressure	1.5MPa(225psi)
使用环境及流体温度/Operating Temperature	-20~70℃(-4~158°F)
适用软管/Applicable Tube	PU及尼龙管/Polyurethane and Nylon

序号	名称	材质
1	调节轮/Needle	6061
2	锁紧轮/Lock Nut	6061
3	阀杆/Valve Rod	SUS304
4	阀体/Metal Body	SUS304
5	O型圈/O-Ring	NBR
6	阀芯/N-Holder	SUS304
7	单向密封圈/H-Packing	NBR
8	塑料体/Resin Body	PBT
9	簧片/Lock Claws	SUS301
10	按钮/Sleeve	POM
11	密封圈/Packing	NBR
12	压环/Back Ring	POM
13	铝套/Collar	6061

序号	名称	材质
1	调节轮/Needle	SUS304/SUS316L
2	锁紧轮/Lock Nut	SUS304/SUS316L
3	阀杆/Valve Rod	SUS304/SUS316L
4	阀体/Metal Body	SUS304/SUS316L
5	O型圈/O-Ring	FKM
6	挡圈/Steel Ring	SUS304
7	单向密封圈/H-Packing	FKM
8	阀芯/N-Holder	SUS304/SUS316L
9	阀套/Resin Body	SUS304/SUS316L
10	簧片/Lock Claws	SUS301
11	按钮/Sleeve	SUS304/SUS316L
12	密封圈/Packing	FKM
13	压环/Back Ring	SUS304F
14	钢套/Collar	SUS304/SUS316L

⊖ISC-SC / ISC-SL节流阀

New



MODEL			
ISC04-M5-SC(SL)	ISC08-01-SC(SL)	ISC10-02-SC(SL)	ISC12-03-SC(SL)
ISC06-M5-SC(SL)	ISC08-02-SC(SL)	ISC10-03-SC(SL)	ISC12-04-SC(SL)
ISC06-01-SC(SL)	ISC08-03-SC(SL)	ISC10-04-SC(SL)	
ISC06-02-SC(SL)	ISC08-04-SC(SL)	ISC12-02-SC(SL)	

⊖ISC-G-SC / ISC-G-SL节流阀-G螺纹

New



MODEL			
ISC06-G01-SC(SL)	ISC08-G02-SC(SL)	ISC10-G02-SC(SL)	ISC12-G02-SC(SL)
ISC06-G02-SC(SL)	ISC08-G03-SC(SL)	ISC10-G03-SC(SL)	ISC12-G03-SC(SL)
ISC08-G01-SC(SL)	ISC08-G04-SC(SL)	ISC10-G04-SC(SL)	ISC12-G04-SC(SL)

ISU-SC管道阀



MODEL			
ISU04N-SC	ISU06N-SC	ISU08N-SC	ISU10N-SC
ISU12N-SC			

SFUW禁铜类自锁型管道阀

New



MODEL			
SFUW04	SFUW06	SFUW08	SFUW10
SFUW12			

SFCW禁铜类带锁节流阀



MODEL			
SFCW04-M3	SFCW06-01	SFCW08-03	SFCW12-03
SFCW04-M5	SFCW06-02	SFCW10-02	SFCW12-04
SFCW04-01	SFCW08-01	SFCW10-03	
SFCW06-M5	SFCW08-02	SFCW10-04	

SFCW-G禁铜类带锁节流阀-G螺纹



MODEL			
SFCW06-G01	SFCW08-G02	SFCW10-G03	SFCW12-G03
SFCW06-G02	SFCW08-G03	SFCW10-G04	SFCW12-G04
SFCW08-G01	SFCW10-G02		

SFSC禁铜类节流阀



MODEL			
SFSC04-M5	SFSC06-02	SFSC08-03	SFSC10-04
SFSC04-01	SFSC06-03	SFSC08-04	SFSC12-01
SFSC04-02	SFSC06-04	SFSC10-01	SFSC12-02
SFSC06-M5	SFSC08-01	SFSC10-02	SFSC12-03
SFSC06-01	SFSC08-02	SFSC10-03	SFSC12-04

SFSC-G禁铜类节流阀-G螺纹



MODEL			
SFSC04-G01	SFSC06-G02	SFSC08-G03	SFSC10-G04
SFSC04-G02	SFSC08-G01	SFSC10-G02	SFSC12-G03
SFSC06-G01	SFSC08-G02	SFSC10-G03	SFSC12-G04

SFSS禁铜类自由旋转型



MODEL			
SFSS04-M5	SFSS06-01	SFSS10-01	SFSS12-03
SFSS04-01	SFSS06-02	SFSS10-02	
SFSS04-02	SFSS08-01	SFSS10-03	
SFSS06-M5	SFSS08-02	SFSS12-02	

SFSU禁铜类管道阀



MODEL			
SFSU04	SFSU06	SFSU08	SFSU10
SFSU12			



订购号 / Order

QKF 06 - 01 - □ - □ - □

⑥ 空白/Blank：标准型/Standard Type
L：铝制6061

⑤ 塑料体帽颜色/Color

④ 先导口内螺纹/Control Female Thread

规格/Specifications	QKF*-(G)02		QKF*-(G)01	QKF*-(G)03	QKF*-(G)04
代号/Code	空白/Blank	G01	空白/Blank	空白/Blank	空白/Blank
螺纹/Thread	M5	G1/8	M5	G3/8	G3/8

规格/Specifications	QKS*-01	QKS*-02	QKS*-03	QKS*-04
螺纹/Thread	M5	G1/8	G1/8	G3/8

③ 外螺纹尺寸/Thread Size

	英制锥管螺纹/Taper Pipe Thread				英制直管螺纹/G Thread			
代号/Code	01	02	03	04	G01	G02	G03	G04
尺寸/Size	R1/8	R1/4	R3/8	R1/2	G1/8	G1/4	G3/8	G1/2

螺纹型内外螺纹相同时省略：例QKF-G01/Elimination of the same femalel and male threads : Example QKF-G01

② a.接管型/Connect Tube：管径/Tube Outer Diameter

	公制/Metric Size				
代号/Code	04	06	08	10	12
气管外径/Tube Outer Diameter(mm)	Φ4	Φ6	Φ8	Φ10	Φ12

b.螺纹型/Thread：内螺纹尺寸/Female Thread

	英制直管螺纹/G Thread			
代号/Code	G01	G02	G03	G04
尺寸/Size	G1/8	G1/4	G3/8	G1/2

① 型号/Model

QKF	QKS

特点 / Features

- 压力保持的安全回路
- 带先导单向阀和调速阀一体化
- 能使气缸瞬间中间停止，防止气缸停止运作后的自走现象
- 特殊回路设计应用

- Safety circuit for pressure maintenance
- Integrated with pilot check valve and speed controls
- It can instantly stop the cylinder in the middle, preventing self walking phenomenon after the cylinder stops operating
- Special circuit design applications

结构图 / Structure Chart

图形符号 / Symbol

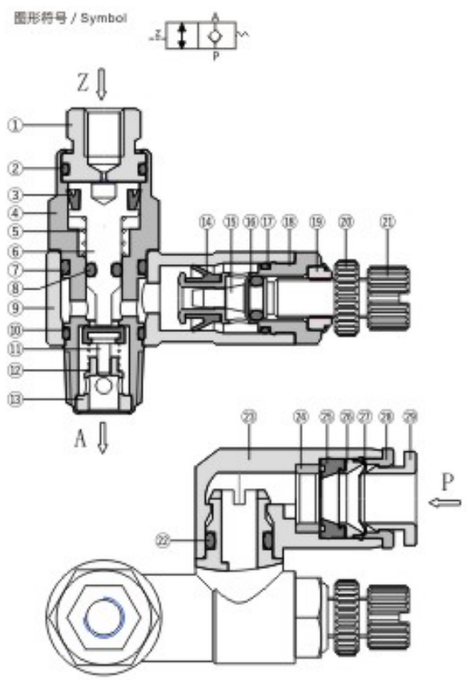

精确定位
Accurate positioning

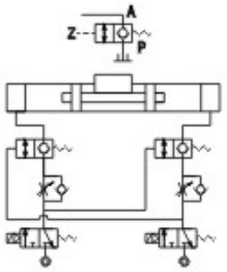

压力保持
Pressure maintenance

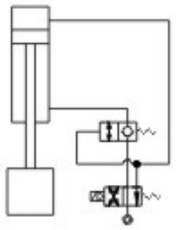

技术参数 / Specifications

使用流体 / Fluid	空气/Air
使用压力范围 / Operating Pressure	0.1~1.0MPa（150psi）
耐压 / Max Pressure	1.5MPa
先导口动作压力 / Action pressure of the pilot port	使用压力的50%以上 / More than 50% of the operating pressure
使用温度范围 / Operating Temperature	-20~70℃(-4~158℉)
适用软管/ Applicable Tube	PU及尼龙管/Polyurethane and Nylon

序号	名称	材质
1	气控座(Air contron seat)	镀镍铜(Brass)
2	O型圈(O-Ring)	丁腈橡胶(NBR)
3	Y型圈(Y-Packing)	丁腈橡胶(NBR)
4	阀体(Metal Body)	镀镍铜(Brass)
5	弹簧(Spring)	不锈钢(SUS)
6	推杆(Push Rod)	镀镍铜(Brass)
7	O型圈(O-Ring)	丁腈橡胶(NBR)
8	O型圈(O-Ring)	氢化丁腈橡胶(HNBR)
9	塑料体(Resin Body)	聚对苯二甲酸丁二醇脂(PBT)
10	O型圈(O-Ring)	丁腈橡胶(NBR)
11	密封垫(Parking Washer)	黄铜+丁腈橡胶(Cu+NBR)
12	弹簧(Spring)	不锈钢(SUS)
13	导环(Guide Ring)	镀镍铜(Brass)
14	单向密封圈(H-Packing)	丁腈橡胶(NBR)
15	阀杆(Valve rod)	镀镍铜(Brass)
16	O型圈(O-Ring)	丁腈橡胶(NBR)
17	O型圈(O-Ring)	丁腈橡胶(NBR)
18	调速阀体(Valve body)	镀镍铜(Brass)
19	阀杆座(Rod Seat)	镀镍铜(Brass)
20	锁紧轮(Lock Nut)	镀镍铜(Brass)
21	调节轮(Needle)	镀镍铜(Brass)
22	O型圈(O-Ring)	丁腈橡胶(NBR)
23	弯头阀套(Elbow Body)	聚对苯二甲酸丁二醇脂(PBT)
24	铜套(Set)	镀镍铜(Brass)
25	密封圈(Packing)	丁腈橡胶(NBR)
26	压环(Back Ring)	聚甲醛(POM)
27	簧片(Lock Claws)	不锈钢(SUS)
28	锌套(Collar)	锌合金(ZINC)
29	按钮(Sleeve)	聚甲醛(POM)

⊖QKF气控阀



MODEL			
QKF06-01	QKF06-02	QKF08-01	QKF08-02

⊖QKF-G气控阀-G螺纹



MODEL			
QKF06-G01	QKF06-G02	QKF08-G01	QKF08-G02

⊖QKF气控阀-螺纹连接型



MODEL			
QKFG01-01	QKFG02-02	QKFG02-02-G01	

⊖QKF气控阀-螺纹连接型G螺纹



MODEL			
QKF-G01	QKF-G02		

⊖QKF-L气控阀-螺纹连接型



MODEL			
QKFG03-03-L	QKFG04-04-L		

⊖QKF-L气控阀-螺纹连接型G螺纹



MODEL			
QKF-G03-L	QKF-G04-L		

⊖QKS调速气控阀



MODEL			
QKS06-01	QKS08-02	QKS10-03	QKS12-04
QKS06-02	QKS08-03	QKS12-03	
QKS08-01	QKS10-02	QKS10-04	



订购号 / Order

ISE 06 - 01 - □

④ 塑料体帽颜色/Color

③ 螺纹尺寸/Thread Size;

	英制锥管螺纹/Taper Pipe Thread				英制直管螺纹/G Thread			
代号/Code	01	02	03	04	G01	G02	G03	G04
尺寸/Size	R1/8	R1/4	R3/8	R1/2	G1/8	G1/4	G3/8	G1/2

② 管径/ Tube Outer Diameter

	公制/Metric Size		
代号/Code	08	10	12
气管外径/Tube Outer Diameter(mm)	Φ8	Φ10	Φ12

① 型号/MODEL

特点 / Features

- 适用于高速驱动的气缸
- 排气阀带有一个快速接头方便配管固定
- 阀门同时起到往复阀的作用
- 排气端带有节流消声功能，可对气缸进行高速控制，同时可减少排气噪声

- Used to the high-speed cylinders
- The exhaust valve with a quick fittings to fix the tube easily
- The valve have the function of the shuttle valve
- The exhaust side have the fuction with throttling and noise elimination, It can control the high-speed cylinder, at the same time also can reduce the exhaust noise

结构图 / Structure Chart

图形符号 / Symbol

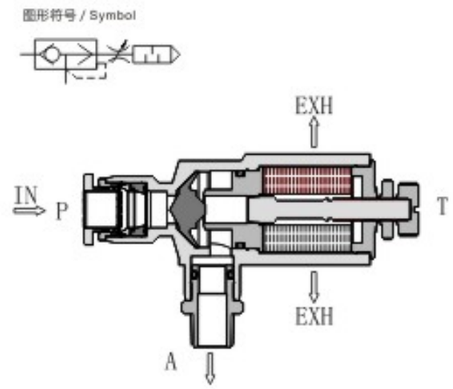

技术参数 / Specifications

使用流体/Fluid	空气，真空/Air,Vacuum
使用压力范围/Operating Pressure	0.1~1.0MPa(15~150psi)
使用环境及流体温度/Operating Temperature	-20~70℃(-4~158°F)
适用软管/Applicable Tube	PU及尼龙管/Polyurethane and Nylon

⊖ISE带节流消声器的快速排气阀



MODEL			
ISE08-01	ISE08-03	ISE10-02	
ISE08-02	ISE10-01	ISE10-03	

⊖ISE-G带节流消声器的快速排气阀-G螺纹



MODEL			
ISE08-G01	ISE08-G03	ISE10-G02	
ISE08-G02	ISE10-G01	ISE10-G03	

带节流消声器的快速排气阀大流量型（阻燃）
The Quick Exhaust Valves With High Flow Speed Control And Silencer (Flame Retardant)

特点 / Features

- 使用阻燃性PBT，阻燃等级UL94-V0
- 较基础款流量调节范围约增加50%

- Flame-retardant PBT is used, with a flame retardant grade UL94-V0
- The regulation range of the basic flow rate model has increased by approximately 50%

技术参数 / Specifications

使用流体/Fluid	空气，真空/Air,Vacuum
使用压力范围/Operating Pressure	0.1~1.0MPa(15~150psi)
耐压/Max Pressure	1.5MPa(225psi)
使用环境及流体温度/Operating Temperature	-20~70℃(-4~158°F)
适用软管/Applicable Tube	PU及尼龙管/Polyurethane and Nylon

⊖ISEC大流量型带消音节流功能的快排阀(阻燃)

New



MODEL			
ISEC10-02	ISEC10-04	ISEC12-03	
ISEC10-03	ISEC12-02	ISEC12-04	

通用型截止阀
Stop Fittings



订购号 / Order

ISPC 06 - 01 - □

④ 塑料体帽颜色/Color

③ 螺纹尺寸/Thread Size;

	英制锥管螺纹/Taper Pipe Thread				英制直管螺纹/G Thread				公制螺纹/Mertric Thread	
代号/Code	01	02	03	04	G01	G02	G03	G04	M5	M6
尺寸/Size	R1/8	R1/4	R3/8	R1/2	G1/8	G1/4	G3/8	G1/2	M5X0.8	M6X1

② 管径/ Tube Outer Diameter

	公制/Metric Size				
代号/Code	04	06	08	10	12
气管外径/Tube Outer Diameter(mm)	Φ4	Φ6	Φ8	Φ10	Φ12

① 型号/MODEL

特点 / Features

- 当管子断开连接时，能制止空气从接头流出，只有当重新连接上后，气体才能流通
- Air flows is stopped from the tube if it is released, The air flows again only after the tube is connected

结构图 / Structure Chart

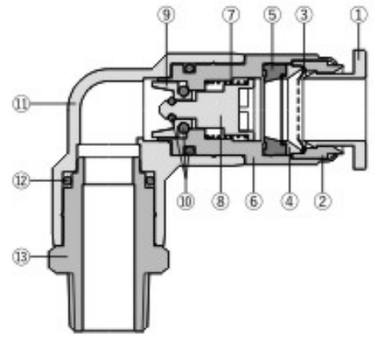

技术参数 / Specifications

使用流体/Fluid	空气（无其他的气体和液体）Air(no other gases orliquids)
使用压力范围/Operating Pressure	0~1.0MPa(150psi)
负压/Negative Pressure	-100Kpa(-29.5 in-Hg)
使用温度范畴/Operating Temperature	-20~70℃(-4~158°F)
适用软管/Applicable Tube	PU及尼龙管/Polyurethane and Nylon

序号	名称	材质
1	按钮(Sleeve)	聚甲醛(POM)
2	锌套(Collar)	锌合金(ZINC)
3	簧片(Lock Claws)	不锈钢(SUS)
4	压环(Back Ring)	聚甲醛(POM)
5	密封圈(Packing)	丁腈橡胶(NBR)
6	体(Body)	镀镍铜(Brass)
7	弹簧(Valve Spring)	不锈钢(SUS)
8	阀芯(Valve)	聚甲醛(POM)
9	阀芯座(Back Valve)	聚甲醛(POM)
10	O型圈(O-Ring)	丁腈橡胶(NBR)
11	塑料体(Resin Body)	聚对苯二甲酸丁二醇脂(PBT)
12	O型圈(O-Ring)	丁腈橡胶(NBR)
13	铜体(Metal Body)	镀镍铜(Brass)

ISPC



MODEL			
ISPC04-01	ISPC08-01	ISPC10-02	ISPC12-02
ISPC06-01	ISPC08-02	ISPC10-03	ISPC12-03
ISPC06-02	ISPC08-03	ISPC10-04	ISPC12-04

ISPL



MODEL			
ISPL04-M5	ISPL06-M6	ISPL08-02	ISPL10-04
ISPL04-M6	ISPL06-01	ISPL08-03	ISPL12-02
ISPL04-01	ISPL06-02	ISPL10-02	ISPL12-03
ISPL06-M5	ISPL08-01	ISPL10-03	ISPL12-04

ISPC-G



MODEL			
ISPC04-G01	ISPC08-G01	ISPC10-G02	ISPC12-G02
ISPC06-G01	ISPC08-G02	ISPC10-G03	ISPC12-G03
ISPC06-G02	ISPC08-G03	ISPC10-G04	ISPC12-G04

ISPL-G



MODEL			
ISPL04-G01	ISPL08-G01	ISPL10-G02	ISPL12-G02
ISPL06-G01	ISPL08-G02	ISPL10-G03	ISPL12-G03
ISPL06-G02	ISPL08-G03	ISPL10-G04	ISPL12-G04

ISPU



MODEL			
ISPU04	ISPU06	ISPU08	ISPU10
ISPU12			

ISAIAH

不锈钢截止阀
Stainless Steel Stop Fittings

A 截止阀 Stop Fittings

订购号 / Order

ISPC　06 - 01 - SC

① 型号/MODEL

② 管径/ Tube O.D

	公制/Metric Size				
代号/Code	04	06	08	10	12
气管外径/Tube O.D(mm)	Φ4	Φ6	Φ8	Φ10	Φ12

③ 螺纹尺寸/Thread Size

	英制锥管螺纹/Taper Pipe Thread				英制直管螺纹/G Thread			
代号/Code	01	02	03	04	G01	G02	G03	G04
尺寸/Size	R1/8	R1/4	R3/8	R1/2	G1/8	G1/4	G3/8	G1/2

④ 材质/ Material

代号/Code	SC
材质/Material	SUS304

结构图 / Structure Chart

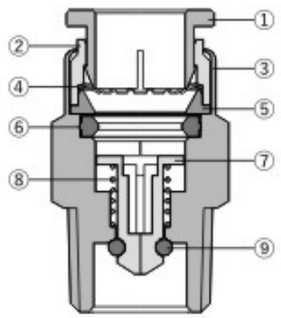

技术参数 / Specifications

使用流体/Fluid	空气/Air
使用压力范围/Operating Pressure	0.1~1.0MPa
耐压/Max Pressure	1.5MPa
使用温度范围/Operating Temperature	-20~70℃
适用软管/Applicable Tube	PU及尼龙管/Polyurethane and Nylon

序号	名称	材质
1	按钮/Sleeve	SUS304
2	钢套/Collar	SUS304
3	簧片/Lock Claws	SUS301
4	压环/Back Ring	SUS304
5	密封圈/Packing	FKM
6	阀芯/Valve	POM
7	弹簧/Valve Spring	SUS304
8	接头体/Metal Body	SUS304
9	O型圈/O-Ring	FKM

⊖ISPC截止接头

New



MODEL			
ISPC08-02-SC	ISPC08-03-SC	ISPC08-G02-SC	ISPC08-G03-SC

ISAIAH

通用型单向阀
Check Valves

A 单向阀 Check Valves



订购号 / Order

IPCVC　06 - 01 □ - □

① 型号/MODEL

② 管径/ Tube Outer Diameter

	公制/Metric Size				
代号/Code	04	06	08	10	12
气管外径/Tube Outer Diameter(mm)	Φ4	Φ6	Φ8	Φ10	Φ12

③ 螺纹尺寸/Thread Size;

	英制锥管螺纹/Taper Pipe Thread				英制直管螺纹/G Thread				公制螺纹/Mertric Thread	
代号/Code	01	02	03	04	G01	G02	G03	G04	M5	M6
尺寸/Size	R1/8	R1/4	R3/8	R1/2	G1/8	G1/4	G3/8	G1/2	M5X0.8	M6X1

④ 控制方式/Control Way

代号/Code	空白/Blank	B
流向/ Flow to	螺纹流向管子/Thread to Tube	管子流向螺纹/Tube to Thread
PCVC		
PCVF		

⑤ 塑料体帽颜色/Color

特点 / Features

○ 允许空气朝一个方向流动，阻止反方向的空气流通

○ Allow the airflow in one direction but stops in the reverse direction

结构图 / Structure Chart

符号如下：
Symbol as follows:

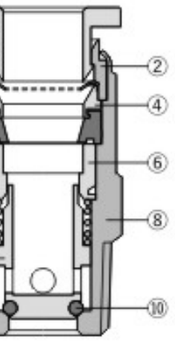

技术参数 / Specifications

使用流体/Fluid	空气（无其他的气体和液体） Air(no other gases or liquids)
使用压力范围/Operating Pressure	0.15~1.0MPa(150psi)
启动压力/Operating Pressure	0.05Mpa
负压/Negative Pressure	-100Kpa(-29.5 in·Hg)
使用温度范畴/Operating Temperature	-20~70℃(-4~158°F)
适用软管/Applicable Tube	PU及尼龙管/Polyurethane and Nylon

序号	名称	材质
1	按钮(Sleeve)	聚甲醛(POM)
2	锌套(Collar)	锌合金(ZINC)
3	簧片(Lock Claws)	不锈钢(SUS)
4	压环(Back Ring)	聚甲醛(POM)
5	密封圈(Packing)	丁腈橡胶(NBR)
6	阀芯座(Back Valve)	镀镍铜(Brass)
7	弹簧(Valve Spring)	不锈钢(SUS)
8	体(Body)	镀镍铜(Brass)
9	阀芯(Valve)	铝合金(6061)
10	O型圈(O-Ring)	丁腈橡胶(NBR)

⊖IPCVC



MODEL			
IPCVC04-M5(B)	IPCVC06-01(B)	IPCVC08-03(B)	IPCVC12-02(B)
IPCVC04-M6(B)	IPCVC06-02(B)	IPCVC10-02(B)	IPCVC12-03(B)
IPCVC04-01(B)	IPCVC08-01(B)	IPCVC10-03(B)	IPCVC12-04(B)
IPCVC06-M5(B)	IPCVC08-02(B)	IPCVC10-04(B)	

⊖IPCVC-G



MODEL			
IPCVC04-G01(B)	IPCVC08-G01(B)	IPCVC10-G02(B)	IPCVC12-G02(B)
IPCVC06-G01(B)	IPCVC08-G02(B)	IPCVC10-G03(B)	IPCVC12-G03(B)
IPCVC06-G02(B)	IPCVC08-G03(B)	IPCVC10-G04(B)	IPCVC12-G04(B)

⊖IPCVF



MODEL	
IPCVF01-01(B)	IPCVF03-03(B)
IPCVF02-02(B)	IPCVF04-04(B)

⊖IPCVF-G



MODEL	
IPCVF01-G01(B)	IPCVF03-G03(B)
IPCVF02-G02(B)	IPCVF04-G04(B)

⊖IPCVL

New



MODEL	
IPCVL06-01(B)	IPCVL06-03(B)
IPCVL06-02(B)	IPCVL06-04(B)

⊖IPCVU



MODEL		
IPCVU04	IPCVU06	IPCVU08

⊖IPCVU



MODEL	
IPCVU10	IPCVU12

⊖ACV内螺纹型单向阀



MODEL	
ACV-G01	ACV-G02

不锈钢单向阀
Stainless Steel Check Valve

订购号 / Order

ACV - 01 - SC

① 型号/MODEL

② 螺纹尺寸/Thread Size:

	美制直管螺纹/G Thread					
代号/Code	G01	G02	G03	G04	G06	G10
尺寸/Size	G1/8	G1/4	G3/8	G1/2	G3/4	G1

③ 材质/ Material

代号/Code	SC
材质/Material	SUS304

结构图 / Structure Chart

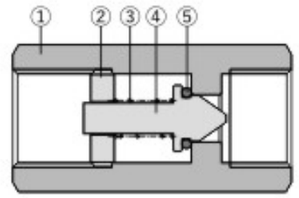

技术参数 / Specifications

使用流体/Fluid	空气/Air
使用压力范围/Operating Pressure	0.1~1.0MPa
耐压/Max Pressure	1.5MPa
使用温度范围/Operating Temperature	-20~70℃

序号	名称	材质
1	本体/Body	SUS304
2	螺纹座/Threaded Seat	SUS304
3	弹簧/Valve Spring	SUS304
4	阀芯/Valve	SUS304
5	O型圈/O-Ring	FKM

⊖ACV-SC内螺纹单向阀 Check Valve with female thread



MODEL			
ACV-G01-SC	ACV-G02-SC	ACV-G03-SC	ACV-G04-SC
ACV-G06-SC	ACV-G10-SC		

纺织行业专用单向阀
Industrial-Grade Check Valves

特点 / Features

○ 产品能在高频率工况下使用
○ 产品使用寿命长
○ 产品起动压力低

○ The product can be used under high-frequency operating conditions
○ The product with long service life
○ The product with low staring pressure.

⊖IPCVC

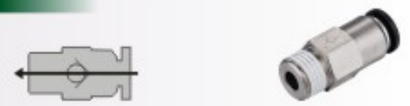

MODEL			
IPCVC06-01B-T	IPCVC06-02B-T		

主要应用于纺织机械
Mainly used in Textile Machinery



订购号 / Order

HV F S 06 - 01 □ - □

⑦ 塑料体帽颜色/Color

⑥ 功能/Function

代号/Code	空白/Blank	B
功能/Function	三通阀/Three-way Valves	二通阀/Two-way Valves

⑤ 螺纹尺寸/Thread Size;

	英制锥管螺纹/Taper Pipe Thread				英制直管螺纹/G Thread			
代号/Code	01	02	03	04	G01	G02	G03	G04
尺寸/Size	R1/8	R1/4	R3/8	R1/2	G1/8	G1/4	G3/8	G1/2

④ 管径/ Tube Outer Diameter

	公制/Metric Size				
代号/Code	04	06	08	10	12
气管外径/Tube Outer Diameter(mm)	Φ4	Φ6	Φ8	Φ10	Φ12

③ 螺纹/Thread

② 接管/Connect Tube

① 型号/Model

特点 / Features

- 关闭三通阀时，可以切断压缩空气流入，同时可将气动装置的残留压力排除，以便进行维修和定期检查，能够确保安全
- 两通阀无空气排出功能
- 手控阀门有四种类型供使用

- When closing the three-way valve, it can cut off the flow of compressed air and eliminate the residual pressure of the pneumatic device for maintenance and regular inspection, ensuring safety
- The two-way valve has no air discharge function
- There are four types of hand valves for choosing

结构图 / Structure Chart

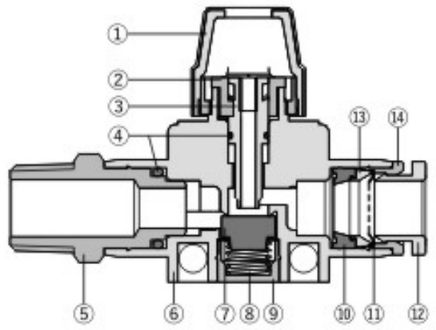

技术参数 / Specifications

使用流体/Fluid	空气（无其他的气体和液体） Air(no other gases orliquids)
使用压力范围/Operating Pressure	0.1~1.0MPa(150psi)
负压/Negative Pressure	-100Kpa(-29.5 in-Hg)
使用温度范畴/Operating Temperature	-20~70℃(-4~158°F)
适用软管/Applicable Tube	PU及尼龙管/Polyurethane and Nylon

序号	名称	材质
1	旋转钮(Cap)	聚甲醛(POM)
2	推杆座(Push Rod seat)	聚甲醛(POM)
3	推杆(Push Rod)	聚甲醛(POM)
4	O型圈(O-Ring)	丁腈橡胶(NBR)
5	铜体(Metal Body)	镀镍铜(Brass)
6	塑料体(Resin Body)	聚对苯二甲酸丁二醇脂(PBT)
7	密封件(Packing)	丁腈橡胶(NBR)
8	弹簧(Valve Spring)	不锈钢(SUS)
9	弹簧座(Spring seat)	镀镍铜(Brass)
10	密封圈(Packing)	丁腈橡胶(NBR)
11	簧片(Lock Claws)	不锈钢(SUS)
12	按钮(Sleeve)	聚甲醛(POM)
13	压环(Back Ring)	聚甲醛(POM)
14	锌套(Collar)	锌合金(ZINC)

三通阀 / Three-way vavle

三通控制阀在切断输入端压缩空气时，同时将气动装置内部的残余压力从输出端排出，从而能够保证安全。
两通控制阀由于不排放残压，因此适用于不把贮气桶中的残压排出元件。

When the three-way control valve cuts off the compressed air at the input end, it also discharges the residual pressure inside the pneumatic device from the output end, thereby ensuring safety
The two-way valve dose not discharge residual pressure,and suitable for the tank or other device that does not require a discharging residual pressure.

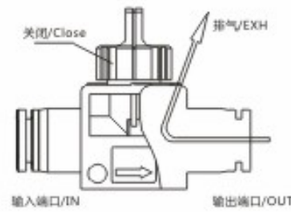

⊖HVFF管接型



MODEL			
HVFF04-04(B)	HVFF06-06(B)	HVFF08-08(B)	HVFF10-10(B)
HVFF12-12(B)	HVFF08-06(B)	HVFF10-08(B)	HVFF12-10(B)

⊖HVFS由指管端流向螺纹端型



MODEL			
HVFS06-01(B)	HVFS08-01(B)	HVFS10-02(B)	HVFS12-02(B)
HVFS06-02(B)	HVFS08-02(B)	HVFS10-03(B)	HVFS12-03(B)
HVFS06-03(B)	HVFS08-03(B)	HVFS10-04(B)	HVFS12-04(B)

⊖HVFS-G插管端流向螺纹端型-G螺纹



MODEL			
HVFS06-G01(B)	HVFS08-G01(B)	HVFS10-G02(B)	HVFS12-G02(B)
HVFS06-G02(B)	HVFS08-G02(B)	HVFS10-G03(B)	HVFS12-G03(B)
HVFS06-G03(B)	HVFS08-G03(B)	HVFS10-G04(B)	HVFS12-G04(B)

⊖HVSS螺纹连接型



MODEL			
HVSS01-01(B)	HVSS02-02(B)	HVSS03-03(B)	HVSS04-04(B)
HVSS02-01(B)	HVSS03-02(B)	HVSS04-03(B)	

⊖HVSF由螺纹端流向插管端型



MODEL			
HVSF01-06(B)	HVSF01-08(B)	HVSF02-10(B)	HVSF02-12(B)
HVSF02-06(B)	HVSF02-08(B)	HVSF03-10(B)	HVSF03-12(B)
HVSF03-06(B)	HVSF03-08(B)	HVSF04-10(B)	HVSF04-12(B)

⊖HVSS-G螺纹连接型-G螺纹



MODEL			
HVSSG01-G01(B)	HVSSG02-G02(B)	HVSSG03-G03(B)	HVSSG04-G04(B)
HVSSG02-G01(B)	HVSSG03-G02(B)	HVSSG04-G03(B)	

⊖HVSF-G由螺纹端流向插管端型-G螺纹



MODEL			
HVSFG01-06(B)	HVSFG01-08(B)	HVSFG02-10(B)	HVSFG02-12(B)
HVSFG02-06(B)	HVSFG02-08(B)	HVSFG03-10(B)	HVSFG03-12(B)
HVSFG03-06(B)	HVSFG03-08(B)	HVSFG04-10(B)	HVSFG04-12(B)



特点 / Features

- 由于产品由黄铜及铝制成，因此长时间暴露在空气中，也可使用很长时间
- Made of brass and aluminum for a long life-span

订购号 / Order

ISV 01 - FS

① 型号/Model

③ 螺纹尺寸/Thread Size;

	美制锥管螺纹/Taper Pipe Thread				美制直管螺纹/G Thread			
代号/Code	01	02	03	04	G01	G02	G03	G04
尺寸/Size	R1/8	R1/4	R3/8	R1/2	G1/8	G1/4	G3/8	G1/2

所有的内螺纹都是G螺纹 /All of Female thread are G thread

③ 连接方式/Connection Mode

代号/Code	FS	SS	FF	SF
连接方式/Connection mode	内外牙型/Female-Male	双外牙型/Male-Male	双内牙型/Female-Female	外内牙型/Male-Female

结构图 / Structure Chart

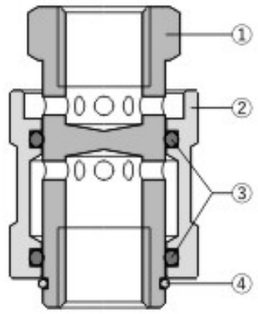

序号	名称	材质
1	铜体(Metal Body)	镀镍铜(Brass)
2	滑套(Valve)	铝(LY12)
3	O型圈(O-Ring)	丁腈橡胶(NBR)
4	卡环(Snap-Ring)	不锈钢(SUS)

MODEL			
ISV01	ISV02	ISV03	ISV04



订购号 / Order

BVC 06 - 01 - □

① 型号/Model

② 管径/ Tube Outer Diameter

	公制/Metric Size		
代号/Code	04	06	08
气管外径/Tube Outer Diameter(mm)	Φ4	Φ6	Φ8

③ 螺纹尺寸/Thread Size

	英制锥管螺纹/Taper Pipe Thread				英制直管螺纹/G Thread			
代号/Code	01	02	03	04	G01	G02	G03	G04
尺寸/Size	R1/8	R1/4	R3/8	R1/2	G1/8	G1/4	G3/8	G1/2

⑥ 塑料体帽颜色/Color

代号/Code	无	A
颜色/Color		

BVU、BVC系列可选颜色仅**黑体蓝按钮**
BVU and BVC series are available in **black body and blue sleeve** only

结构图 / Structure Chart

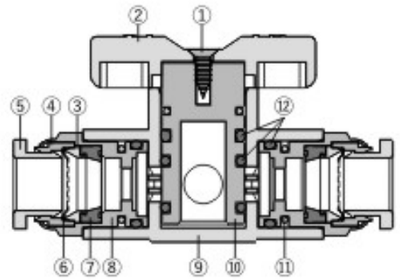

序号	名称	材质
1	螺钉(Bolt)	不锈钢(SUS)
2	把手(Handle)	聚苯醚(PPO)
3	压环(Back Ring)	聚甲醛(POM)
4	锌套(Collar)	锌合金(ZINC)
5	按钮(Sleeve)	聚甲醛(POM)
6	簧片(Lock Claws)	不锈钢(SUS)
7	密封圈(Packing)	丁腈橡胶(NBR)
8	体(Body)	镀镍铜(Brass)
9	塑料体(Plastic Body)	尼龙(PA)
10	轴(Spool)	聚苯醚(PPO)
11	卡环(Pin)	不锈钢(SUS)
12	O型圈(O-Ring)	丁腈橡胶(NBR)

⊖BVU球阀



MODEL				
BVU04	BVU06	BVU08	BVU08-06	

⊖BVC球阀



MODEL				
BVC06-01	BVC06-02	BVC06-03	BVC08-01	BVC08-02
BVC08-03				

⊖BVC-G球阀-G螺纹



MODEL				
BVC06-G01	BVC06-G02	BVC06-G03	BVC08-G01	BVC08-G02
BVC08-G03				

⊖BVUS球阀



MODEL				
BVUS06-A	BVUS08-A			

压力指示接头
Pressure Indicator Fittings

订购号 / Order

ISCX 06 - M5 - 4 BU - □

⑥塑料体帽颜色/Color

⑤ 指示杆颜色/Indicator rod color

代号/Code	BU	RD	GN
颜色/Color	蓝色/Blue	红色/Red	绿色/Green

④ 指示杆行程/Indicator rod Stroke：
有4mm和2.5mm可选/Available in 4mm and 2.5mm

代号/Code	4	2.5
行程/Stroke	4mm	2.5mm

③ 螺纹尺寸/Thread Size

	英制锥管螺纹/Taper Pipe Thread	公制螺纹/Mertric Thread
代号/Code	01	M5
尺寸/Size	R1/8	M5X0.8

② 管径/ Tube Outer Diameter

	公制/Metric Size	
代号/Code	04	06
气管外径/Tube Outer Diameter(mm)	Φ4	Φ6

① 类别/Series

代号/Code	ISCX	IPCX
类别/Series	L型/Type	直立型/Erect Type

产品图示说明 / Product Graphic Description

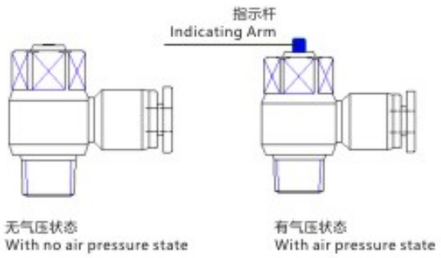

无气压状态
With no air pressure state

有气压状态
With air pressure state

作用 / Applications

- 应用于气路中指示是否有气压
- Indicating whether there is air pressure in the air passage

特点 / Features

- 能在大于1.5Bar状态保持指示作用
- 产品结构紧凑，占有空间小；安装接管方便
- Be able to maintain indicator function in state than 1.5Bar
- The product has compact structure and small occupancy space, and easy to installation

ISCX



MODEL			
ISCX04-M5	ISCX04-01	ISCX06-02	ISCX04-G01
ISCX06-M5	ISCX06-01	ISCX08-02	ISCX06-G01

IPCX

New



MODEL			
IPCX-M5			

快速排气接头
Quick Exhaust Fittings



符号如下
Symbol as follows

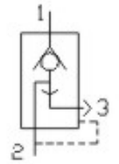

订购号 / Order

PCVS 04 - G01

③ 螺纹尺寸/Thread Size

② 管径/ Tube Outer Diameter

① 类别/Series

特点 / Features

- 通过接头自身来实现管路快速排气，从而提高气缸的运行速度。
- By using the joint itself to achieve rapid exhaust of the pipeline, Improving the running speed of the cylinder.

技术参数 / Specifications

使用流体/Fluid	空气/Air
工作压力范围/Operating Pressure	0.05~1.0MPa
耐压/Max Pressure	1.5MPa
使用环境及流体温度/Operating Temperature	-20~70℃(-4~158°F)
适用软管/Applicable Tube	PU及尼龙管/Polyurethane and Nylon

主要应用于木工机械
Mainly used in the Woodworking Machinery

泄气接头
Deflated Fittings

特点 / Features

- 可释放气压
- It can be release air pressure

XQPH泄气接头

New



MODEL			
XQPH06-01	XQPH08-01		

主要应用于纺织机械
Mainly used in Textile Machinery

禁铜禁锌快插式接头SF系列
Copper/Zinc-free Specifications Quick Connecting Tube Fittings-SF Series



主要应用于新能源行业、半导体行业、化工、生命科学、食品生产
Mainly used in the New Energy Industry, Semiconductor Industry, Chemical Engineering, Life Sciences, and Food Production

订购号 / Order

SF C 06 - 01 - □ - □

⑤ 塑料体帽颜色/Color

代号/Code	空白/Blank	A	BK
颜色/Color			

⑤ 锁紧套材质/Collar Material

代号/Code	空白/Blank	GT
材质/Material	铝/6061	不锈钢/SUS304

④ 螺纹尺寸/Thread Size;

	英制锥管螺纹/Taper Pipe Thread				英制直管螺纹/G Thread				公制螺纹/Mertric Thread	
代号/Code	01	02	03	04	G01	G02	G03	G04	M5	M6
尺寸/Size	R1/8	R1/4	R3/8	R1/2	G1/8	G1/4	G3/8	G1/2	M5X0.8	M6X1

③ 管径/ Tube Outer Diameter

	公制/Metric Size					
代号/Code	04	06	08	10	12	16
气管外径/Tube Outer Diameter(mm)	Φ4	Φ6	Φ8	Φ10	Φ12	Φ16

② 种类/Form

① 类别/Category

特点 / Features

- 可用于铜、锌材质有限制的环境
- 本体为不锈钢，防腐蚀性能强
- 外形尺寸与标准品相同

- It can be used in restricted environment of copper and zinc
- The body is stainless steel with strong corrosion resistance
- The dimensions are the same as the standard ones

结构图 / Structure Chart

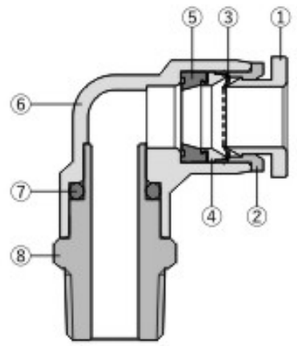

技术参数 / Specifications

使用流体/Fluid	空气，真空/Air,Vacuum
使用压力范围/Operating Pressure	0~1.0MPa(150psi)
负压/Negative Pressure	-100Kpa(-29.5 in-Hg)
耐压/Max Pressure	1.5MPa
使用温度范围/Operating Temperature	-20~70℃(-4~158°F)
适用软管/Applicable Tube	PU及尼龙管/Polyurethane and Nylon

序号	名称	材质
1	按钮/Sleeve	POM
2	铝套/Collar	6061
3	簧片/Lock Claws	SUS301
4	压环/Back Ring	POM
5	密封圈/Packing	NBR
6	塑料体/Resin Body	PBT
7	O型圈/O-Ring	NBR
8	接头体/Metal Body	SUS304/6061

SFC螺纹直通



MODEL			
SFC04-M5	SFC06-03	SFC10-01	SFC12-03
SFC04-01	SFC06-04	SFC10-02	SFC12-04
SFC04-02	SFC08-01	SFC10-03	SFC16-04
SFC06-M5	SFC08-02	SFC10-04	
SFC06-01	SFC08-03	SFC12-01	
SFC06-02	SFC08-04	SFC12-02	

SFC-G螺纹直通-G螺纹



MODEL			
SFC04-G01	SFC08-G02	SFC10-G03	SFC16-G03
SFC04-G02	SFC08-G03	SFC10-G04	SFC16-G04
SFC06-G01	SFC08-G04	SFC12-G02	
SFC06-G02	SFC10-G01	SFC12-G03	
SFC08-G01	SFC10-G02	SFC12-G04	

SFOC螺纹圆直通



MODEL			
SFOC04-M5	SFOC06-02	SFOC10-01	SFOC12-03
SFOC04-01	SFOC06-03	SFOC10-02	SFOC12-04
SFOC04-02	SFOC08-01	SFOC10-03	
SFOC06-M5	SFOC08-02	SFOC10-04	
SFOC06-01	SFOC08-03	SFOC12-02	

SFOC-G螺纹圆直通-G螺纹



MODEL			
SFOC04-G01	SFOC08-G02	SFOC10-G04	SFOC16-G04
SFOC04-G02	SFOC08-G03	SFOC12-G02	
SFOC06-G01	SFOC10-G01	SFOC12-G03	
SFOC06-G02	SFOC10-G02	SFOC12-G04	
SFOC08-G01	SFOC10-G03	SFOC16-G03	

SFL新螺纹弯头



MODEL			
SFL04-M3	SFL06-02	SFL08-04	SFL12-02
SFL04-M5	SFL06-03	SFL10-01	SFL12-03
SFL04-01	SFL06-04	SFL10-02	SFL12-04
SFL04-02	SFL08-01	SFL10-03	SFL16-03
SFL06-M5	SFL08-02	SFL10-04	SFL16-04
SFL06-01	SFL08-03	SFL12-01	

SFL-G新螺纹弯头-G螺纹



MODEL			
SFL04-G01	SFL08-G02	SFL10-G03	SFL16-G03
SFL04-G02	SFL08-G03	SFL10-G04	SFL16-G04
SFL06-G01	SFL08-G04	SFL12-G02	
SFL06-G02	SFL10-G01	SFL12-G03	
SFL08-G01	SFL10-G02	SFL12-G04	

SFPL螺纹弯头



MODEL			
SFPL04-M3	SFPL06-02	SFPL08-04	SFPL12-02
SFPL04-M5	SFPL06-03	SFPL10-01	SFPL12-03
SFPL04-01	SFPL06-04	SFPL10-02	SFPL12-04
SFPL04-02	SFPL08-01	SFPL10-03	
SFPL06-M5	SFPL08-02	SFPL10-04	
SFPL06-01	SFPL08-03	SFPL12-01	

SFPM塑料隔板直通



MODEL			
SFPM06	SFPM08	SFPM10	SFPM12

SFU直通



MODEL			
SFU04	SFU06	SFU08	SFU10
SFU12	SFU16		
SFU06-04	SFU10-08	SFU08-04	SFU12-08
SFU08-06	SFU12-10	SFU10-06	SFU16-12

SFE正三通



MODEL			
SFE04	SFE06	SFE08	SFE10
SFE12	SFE16		
SFE06-04-06	SFE08-06-08	SFE10-08-10	SFE12-10-12
SFE08-04-08	SFE10-06-10	SFE12-08-12	SFE16-12-16

SFY三通



MODEL			
SFY04	SFY06	SFY08	SFY10
SFY12	SFY16		
SFY06-04	SFY08-04	SFY10-06	SFY12-08
SFY08-06	SFY10-08	SFY12-10	SFY16-12

SFV弯头



MODEL			
SFV04	SFV06	SFV08	SFV10
SFV12	SFV16		

SFM隔板直通

New

铝制/Aluminum



MODEL			
SFM04	SFM06	SFM08	SFM10
SFM12			

备注：带垫片款型号：示例 SFM04-DP
Note: Model with gasket, Example: SFM04-DP

SFXG五通



MODEL			
SFXG06	SFXG08	SFXG06-04	SFXG08-04
SFXG08-06			

SFK五通



MODEL			
SFK04	SFK06	SFK08	SFK10
SFK06-04	SFK08-04	SFK08-06	SFK10-06
SFK10-08			

SFLL加长螺纹弯头



MODEL			
SFLL04-M5	SFLL06-02	SFLL08-03	SFLL10-04
SFLL04-01	SFLL06-03	SFLL08-04	SFLL12-01
SFLL04-02	SFLL06-04	SFLL10-01	SFLL12-02
SFLL06-M5	SFLL08-01	SFLL10-02	SFLL12-03
SFLL06-01	SFLL08-02	SFLL10-03	SFLL12-04

SFH外六角弯头



MODEL			
SFH04-M5	SFH06-02	SFH08-04	SFH12-02
SFH04-01	SFH06-03	SFH10-01	SFH12-03
SFH04-02	SFH08-01	SFH10-02	SFH12-04
SFH06-M5	SFH08-02	SFH10-03	
SFH06-01	SFH08-03	SFH10-04	

SFB螺纹正三通



MODEL			
SFB04-M5	SFB06-02	SFB08-03	SFB10-04
SFB04-01	SFB06-03	SFB08-04	SFB12-01
SFB04-02	SFB06-04	SFB10-01	SFB12-02
SFB06-M5	SFB08-01	SFB10-02	SFB12-03
SFB06-01	SFB08-02	SFB10-03	SFB12-04

SFD螺纹侧三通



MODEL			
SFD04-M5	SFD06-02	SFD08-03	SFD10-04
SFD04-01	SFD06-03	SFD08-04	SFD12-01
SFD04-02	SFD06-04	SFD10-01	SFD12-02
SFD06-M5	SFD08-01	SFD10-02	SFD12-03
SFD06-01	SFD08-02	SFD10-03	SFD12-04

SFX螺纹Y三通



MODEL			
SFX04-M5	SFX06-02	SFX08-03	SFX10-04
SFX04-01	SFX06-03	SFX08-04	SFX12-01
SFX04-02	SFX06-04	SFX10-01	SFX12-02
SFX06-M5	SFX08-01	SFX10-02	SFX12-03
SFX06-01	SFX08-02	SFX10-03	SFX12-04

SFZ四通



MODEL			
SFZ04	SFZ06	SFZ08	SFZ10
SFZ12			

SFGJ插入式变径



MODEL			
SFGJ06-04	SFGJ08-06	SFGJ10-08	SFGJ12-08
SFGJ08-04	SFGJ10-06	SFGJ12-06	SFGJ12-10

SFHVFF管接型



MODEL			
SFHVFF04-04(B)	SFHVFF06-06(B)	SFHVFF08-08(B)	SFHVFF10-10(B)
SFHVFF12-12(B)	SFHVFF08-06(B)	SFHVFF10-08(B)	SFHVFF12-10(B)

SFOC-C迷你型圆螺纹直通

New



MODEL			
SFOC04-M5C	SFOC06-M5C		

SFMF隔板内螺纹直通

New

铝制/Aluminum



MODEL			
SFMF04-M5	SFMF06-02	SFMF08-04	SFMF12-02
SFMF04-01	SFMF06-03	SFMF10-01	SFMF12-03
SFMF04-02	SFMF08-01	SFMF10-02	SFMF12-04
SFMF06-M5	SFMF08-02	SFMF10-03	
SFMF06-01	SFMF08-03	SFMF10-04	

备注：带垫片款型号：示例 SFMF04-01-DP
Note: Model with gasket, Example: SFMF04-01-DP

SFMF-G隔板内螺纹直通-G螺纹

New

铝制/Aluminum



MODEL			
SFMF04-G01	SFMF08-G01	SFMF10-G02	SFMF12-G04
SFMF04-G02	SFMF08-G02	SFMF10-G03	
SFMF06-G01	SFMF08-G03	SFMF10-G04	
SFMF06-G02	SFMF08-G04	SFMF12-G02	
SFMF06-G03	SFMF10-G01	SFMF12-G03	

备注：带垫片款型号：示例 SFMF04-G01-DP
Note: Model with gasket, Example: SFMF04-G01-DP

304/316L不锈钢快插接头系列
304/316L Stainless Steel Fittings Series



主要应用于新能源行业、半导体行业、化工、生命科学、食品生产
Mainly used in the New Energy Industry, Semiconductor Industry, Chemical Engineering, Life Sciences, and Food Production

订购号 / Order

IPC　06　-　01　-　SC

④ 材质/ Material

代号/Code	SC	SL
材质/Material	SUS304	SUS316L

③ 螺纹尺寸/Thread Size

	英制锥管螺纹/Taper Pipe Thread				英制直管螺纹/G Thread				公制螺纹/Mertric Thread	
代号/Code	01	02	03	04	G01	G02	G03	G04	M5	M6
尺寸/Size	R1/8	R1/4	R3/8	R1/2	G1/8	G1/4	G3/8	G1/2	M5X0.8	M6X1

② 管径/ Tube Outer Diamete

	公制/Metric Size				
代号/Code	04	06	08	10	12
气管外径/Tube Outer Diameter(mm)	Φ4	Φ6	Φ8	Φ10	Φ12

① 型号/MODEL

特点 / Features

- 主体采用不锈钢材质，产品强度和刚性更佳，具有很强的抗腐蚀能力
- 密封件采用氟橡胶 (FKM)，具有一定的抗化学腐蚀性和耐酸碱性，并能耐高温
- 符合ROHS标准
- 广泛应用于新能源、食品、化工等行业中

- The main body is made of stainless steel material, which has better strength and rigidity, and strong corrosion resistance
- The sealing ring is made of fluororubber (FKM), which has certain resistance to chemical corrosion, acid and alkali, and can withstand high temperatures
- Compliant with ROHS standards
- Widely used in industries such as new energy, food and chemical industry

结构图 / Structure Chart

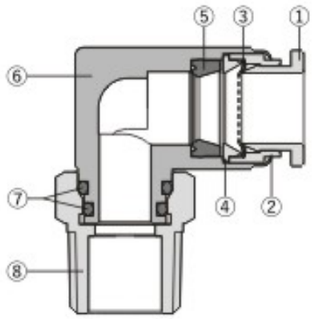

技术参数 / Specifications

使用流体/Fluid	空气，水，蒸汽/Air,Water,Steam
使用压力范围/Operating Pressure	0~1.5MPa
负压/Negative Pressure	-100KPa
耐压/Max Pressure	1.8MPa
使用温度范围/Operating Temperature	-20~140℃
适用软管/Applicable Tube	PU及尼龙管/Polyurethane and Nylon

序号	名称	材质
1	按钮/Sleeve	SUS304/316L
2	钢套/Collar	SUS304/316L
3	簧片/Lock Claws	SUS301
4	压环/Back Ring	SUS304F
5	密封圈/Packing	FKM
6	体/Body	SUS316L
7	O型圈/O-Ring	FKM
8	接头体/Metal Body	SUS304/316L

IPC-SC / IPC-SL螺纹直通



MODEL			
IPC04-M5-SC(SL)	IPC06-02-SC(SL)	IPC10-01-SC(SL)	IPC12-04-SC(SL)
IPC04-M6-SC(SL)	IPC06-03-SC(SL)	IPC10-02-SC(SL)	IPC14-04-SC(SL)
IPC04-01-SC(SL)	IPC06-04-SC(SL)	IPC10-03-SC(SL)	IPC16-03-SC(SL)
IPC04-02-SC(SL)	IPC08-01-SC(SL)	IPC10-04-SC(SL)	IPC16-04-SC(SL)
IPC04-03-SC(SL)	IPC08-02-SC(SL)	IPC12-01-SC(SL)	
IPC06-M5-SC(SL)	IPC08-03-SC(SL)	IPC12-02-SC(SL)	
IPC06-01-SC(SL)	IPC08-04-SC(SL)	IPC12-03-SC(SL)	

IPC-G-SC / IPC-G-SL螺纹直通-G螺纹



MODEL			
IPC04-G01-SC(SL)	IPC08-G01-SC(SL)	IPC10-G03-SC(SL)	IPC14-G04-SC(SL)
IPC04-G02-SC(SL)	IPC08-G02-SC(SL)	IPC10-G04-SC(SL)	IPC16-G03-SC(SL)
IPC06-G01-SC(SL)	IPC08-G03-SC(SL)	IPC12-G01-SC(SL)	IPC16-G04-SC(SL)
IPC06-G02-SC(SL)	IPC08-G04-SC(SL)	IPC12-G02-SC(SL)	
IPC06-G03-SC(SL)	IPC10-G01-SC(SL)	IPC12-G03-SC(SL)	
IPC06-G04-SC(SL)	IPC10-G02-SC(SL)	IPC12-G04-SC(SL)	

IPOC-SC / IPOC-SL螺纹圆直通



MODEL			
IPOC04-M5-SC(SL)	IPOC06-02-SC(SL)	IPOC08-03-SC(SL)	IPOC10-04-SC(SL)
IPOC04-01-SC(SL)	IPOC06-03-SC(SL)	IPOC08-04-SC(SL)	IPOC12-02-SC(SL)
IPOC04-02-SC(SL)	IPOC06-04-SC(SL)	IPOC10-01-SC(SL)	IPOC12-03-SC(SL)
IPOC06-M5-SC(SL)	IPOC08-01-SC(SL)	IPOC10-02-SC(SL)	IPOC12-04-SC(SL)
IPOC06-01-SC(SL)	IPOC08-02-SC(SL)	IPOC10-03-SC(SL)	IPOC16-04-SC(SL)

IPOC-G-SC / IPOC-G-SL螺纹圆直通-G螺纹



MODEL			
IPOC04-G01-SC(SL)	IPOC06-G04-SC(SL)	IPOC10-G01-SC(SL)	IPOC12-G03-SC(SL)
IPOC04-G02-SC(SL)	IPOC08-G01-SC(SL)	IPOC10-G02-SC(SL)	IPOC12-G04-SC(SL)
IPOC06-G01-SC(SL)	IPOC08-G02-SC(SL)	IPOC10-G03-SC(SL)	IPOC16-G04-SC(SL)
IPOC06-G02-SC(SL)	IPOC08-G03-SC(SL)	IPOC10-G04-SC(SL)	
IPOC06-G03-SC(SL)	IPOC08-G04-SC(SL)	IPOC12-G02-SC(SL)	

IPL-SC / IPL-SL螺纹弯头



MODEL			
IPL04-M5-SC(SL)	IPL06-03-SC(SL)	IPL10-01-SC(SL)	IPL12-04-SC(SL)
IPL04-01-SC(SL)	IPL06-04-SC(SL)	IPL10-02-SC(SL)	IPL14-03-SC(SL)
IPL04-02-SC(SL)	IPL08-01-SC(SL)	IPL10-03-SC(SL)	IPL14-04-SC(SL)
IPL06-M5-SC(SL)	IPL08-02-SC(SL)	IPL10-04-SC(SL)	IPL16-03-SC(SL)
IPL06-01-SC(SL)	IPL08-03-SC(SL)	IPL12-02-SC(SL)	IPL16-04-SC(SL)
IPL06-02-SC(SL)	IPL08-04-SC(SL)	IPL12-03-SC(SL)	

IPL-G-SC / IPL-G-SL螺纹弯头-G螺纹



MODEL			
IPL04-G01-SC(SL)	IPL08-G01-SC(SL)	IPL10-G03-SC(SL)	IPL14-G03-SC(SL)
IPL04-G02-SC(SL)	IPL08-G02-SC(SL)	IPL10-G04-SC(SL)	IPL14-G04-SC(SL)
IPL06-G01-SC(SL)	IPL08-G03-SC(SL)	IPL12-G01-SC(SL)	IPL16-G03-SC(SL)
IPL06-G02-SC(SL)	IPL08-G04-SC(SL)	IPL12-G02-SC(SL)	IPL16-0G4-SC(SL)
IPL06-G03-SC(SL)	IPL10-G01-SC(SL)	IPL12-G03-SC(SL)	
IPL06-G04-SC(SL)	IPL10-G02-SC(SL)	IPL12-G04-SC(SL)	

IPB-SC / IPB-SL螺纹正三通



MODEL			
IPB04-01-SC(SL)	IPB06-04-SC(SL)	IPB10-01-SC(SL)	IPB12-03-SC(SL)
IPB04-02-SC(SL)	IPB08-01-SC(SL)	IPB10-02-SC(SL)	IPB12-04-SC(SL)
IPB06-01-SC(SL)	IPB08-02-SC(SL)	IPB10-03-SC(SL)	
IPB06-02-SC(SL)	IPB08-03-SC(SL)	IPB10-04-SC(SL)	
IPB06-03-SC(SL)	IPB08-04-SC(SL)	IPB12-02-SC(SL)	

IPB-G-SC / IPB-G-SL螺纹正三通-G螺纹



MODEL			
IPB04-G01-SC(SL)	IPB06-G04-SC(SL)	IPB10-G01-SC(SL)	IPB12-G02-SC(SL)
IPB04-G02-SC(SL)	IPB08-G01-SC(SL)	IPB10-G02-SC(SL)	IPB12-G03-SC(SL)
IPB06-G01-SC(SL)	IPB08-G02-SC(SL)	IPB10-G03-SC(SL)	IPB12-G04-SC(SL)
IPB06-G02-SC(SL)	IPB08-G03-SC(SL)	IPB10-G04-SC(SL)	
IPB06-G03-SC(SL)	IPB08-G04-SC(SL)	IPB12-G01-SC(SL)	

IPU-SC / IPU-SL联管直通



MODEL			
IPU04-SC(SL)	IPU06-SC(SL)	IPU08-SC(SL)	IPU10-SC(SL)
IPU12-SC(SL)	IPU14-SC(SL)	IPU16-SC(SL)	
IPU06-04-SC(SL)	IPU08-06-SC(SL)	IPU10-08-SC(SL)	IPU12-08-SC(SL)
IPU08-04-SC(SL)	IPU10-06-SC(SL)	IPU12-06-SC(SL)	IPU12-10-SC(SL)

IPM-SC / IPM-SL隔板直通



MODEL			
IPM04-SC(SL)	IPM06-SC(SL)	IPM08-SC(SL)	IPM10-SC(SL)
IPM12-SC(SL)	IPM16-SC(SL)		

IPY-SC / IPY-SL联管Y型三通



MODEL			
IPY04-SC(SL)	IPY06-SC(SL)	IPY08-SC(SL)	IPY10-SC(SL)
IPY12-SC(SL)	IPY14-SC(SL)	IPY16-SC(SL)	

IPE-SC / IPE-SL联管正三通



MODEL			
IPE04-SC(SL)	IPE06-SC(SL)	IPE08-SC(SL)	IPE10-SC(SL)
IPE12-SC(SL)	IPE14-SC(SL)	IPE16-SC(SL)	

IPV-SC / IPV-SL联管弯头



MODEL			
IPV04-SC(SL)	IPV06-SC(SL)	IPV08-SC(SL)	IPV10-SC(SL)
IPV12-SC(SL)			

IPCF-G-SL内螺纹直通系列

New



MODEL			
IPCF04-G01-SL	IPCF06-G03-SL	IPCF08-G04-SL	IPCF12-G01-SL
IPCF04-G02-SL	IPCF06-G04-SL	IPCF10-G01-SL	IPCF12-G02-SL
IPCF04-G03-SL	IPCF08-G01-SL	IPCF10-G02-SL	IPCF12-G03-SL
IPCF06-G01-SL	IPCF08-G02-SL	IPCF10-G03-SL	IPCF12-G04-SL
IPCF06-G02-SL	IPCF08-G03-SL	IPCF10-G04-SL	

316L不锈钢快插S系列
316L Stainless Steel Fittings with S Series



主要应用于新能源行业、半导体行业、化工、生命科学、食品生产
Mainly used in the New Energy Industry, Semiconductor Industry, Chemical Engineering, Life Sciences, and Food Production

订购号 / Order

SS　C　06 - 01

① 类别/Category

代号/Code	SS
类别/Category	不锈钢316L/Stainless Steel 316L

② 种类/Form

③ 管径/ Tube Outer Diameter

	公制/Metric Size				
代号/Code	04	06	08	10	12
气管外径/Tube Outer Diameter(mm)	Φ4	Φ6	Φ8	Φ10	Φ12

③ 螺纹尺寸/Thread Size;

	英制锥管螺纹/Taper Pipe Thread			
代号/Code	01	02	03	04
尺寸/Size	R1/8	R1/4	R3/8	R1/2

	英制直管螺纹/G Thread				公制螺纹/Mertric Thread	
代号/Code	G01	G02	G03	G04	M5	M6
尺寸/Size	G1/8	G1/4	G3/8	G1/2	M5X0.8	M6X1

特点 / Features

- 除密封圈外所有零件都采用SUS316L材料制成，这种材料具有很强的抗腐蚀能力
- 密封圈采用氟橡胶(FKM)，这种材料抗化学腐蚀性能力很强，而且耐酸、耐高温
- 这些零件都属于无油规格并符合食品卫生法，广泛应用于食品、化学、医疗等工业
- The materials ensure Anti-Corrasion highly, all of them are made from SUS316L except the seal ring
- FKM is used as the seal ring, which can ensure Anti-Corrosion and acid resistant, also can be used in high temperature
- The accessories are oil-free and reach the food Hygiene Law of People's Republic of China, which are applied widely in the range.of industry such as food service industry, chemical industry and medical industry

结构图 / Structure Chart

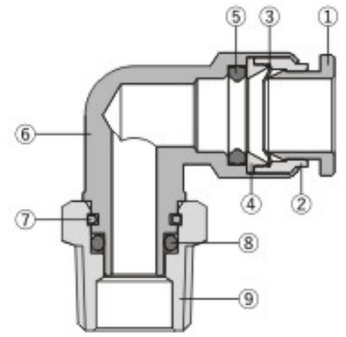

技术参数 / Specifications

使用流体/Fluid	空气，水，蒸汽/Air,Water,Steam
使用压力范围/Operating Pressure	0~1.5MPa
耐压/Max Pressure	1.8MPa
使用温度范围/Operating Temperature	-20~140℃
适用软管/Applicable Tube	PU及尼龙管/Polyurethane and Nylon

序号	名称	材质
1	按钮/Sleeve	SUS316L
2	钢套/Collar	SUS316L
3	簧片/Lock Claws	SUS301
4	压环/Back Ring	SUS316L
5	密封圈/Packing	FKM
6	体/Body	SUS316L
7	C型环/C-Ring	SUS316L
8	O型圈/O-Ring	FKM
9	接头体/Metal Body	SUS316L

⊖SSC螺纹直通



MODEL			
SSC04-01	SSC08-01	SSC10-02	SSC12-02
SSC06-01	SSC08-02	SSC10-03	SSC12-03
SSC06-02	SSC08-03	SSC10-04	SSC12-04

⊖SSC-G螺纹直通-G螺纹



MODEL			
SSC04-M5	SSC06-M5	SSC08-G02	SSC12-G02
SSC04-M6	SSC06-G01	SSC10-G02	SSC12-G03
SSC04-G01	SSC06-G02	SSC10-G03	SSC12-G04
SSC04-G02	SSC08-G01	SSC10-G04	

⊖SSL L型螺纹弯头



MODEL			
SSL04-01	SSL08-01	SSL10-02	SSL12-02
SSL06-01	SSL08-02	SSL10-03	SSL12-03
SSL06-02	SSL08-03	SSL10-04	SSL12-04

⊖SSL-G L型螺纹弯头-G螺纹



MODEL			
SSL04-M5	SSL06-G02	SSL10-G03	SSL12-G04
SSL04-G01	SSL08-G01	SSL10-G04	
SSL06-M5	SSL08-G02	SSL12-G02	
SSL06-G01	SSL10-G02	SSL12-G03	

⊖SSB螺纹正三通



MODEL			
SSB04-01	SSB08-01	SSB10-03	SSB12-03
SSB06-01	SSB08-02	SSB10-04	SSB12-04
SSB06-02	SSB10-02	SSB12-02	

⊖SSB-G螺纹正三通-G螺纹



MODEL			
SSB04-M5	SSB06-G02	SSB10-G03	SSB12-G04
SSB04-G01	SSB08-G01	SSB10-G04	
SSB06-M5	SSB08-G02	SSB12-G02	
SSB06-G01	SSB10-G02	SSB12-G03	

⊖SSE联管正三通



MODEL			
SSE04	SSE06	SSE08	SSE10
SSE12			

⊖SSV联管弯头



MODEL			
SSV04	SSV06	SSV08	SSV10
SSV12			

⊖SSU联管直通



MODEL			
SSU04	SSU06	SSU08	SSU10
SSU12			

⊖SSM隔板直通



MODEL			
SSM04	SSM06	SSM08	SSM10
SSM12			

304/316不锈钢快拧接头系列
304/316 Stainless Steel Push On Fittings Series



主要应用于新能源行业、激光加工
Mainly used in the New Energy Industry and Laser Processing

订购号 / Order

IBC　0805 - 01 - SC

① 型号/MODEL

② 管径/ Tube Outer Diamete

代号/Code	气管外径/O.D	气管内径/I.D
0805	Φ8	Φ5

③ 螺纹尺寸/Thread Size;

	英制锥管螺纹/Taper Pipe Thread				英制直管螺纹/G Thread				公制螺纹/Mertric Thread
代号/Code	01	02	03	04	G01	G02	G03	G04	M5
尺寸/Size	R1/8	R1/4	R3/8	R1/2	G1/8	G1/4	G3/8	G1/2	M5X0.8

④ 材质/ Material

代号/Code	SC	SS
材质/Material	SUS304	SUS316

特点 / Features

- 具有多种型号规格，广泛应用于各类流体管路连接
- 用锁母结构，能更好防止气管脱落，管路连接后安全可靠
- 采用不锈钢材质，具有良好的防腐性、可抗化学污染性能，并耐高温

- It has multiple models and specifications and is widely used for connecting various fluid pipelines
- The use of a locking nut structure can better prevent the trachea from falling, and the pipeline connection is safe and reliable
- Made of stainless steel material, it has good corrosion resistance, chemical pollution resistance, and high temperature resistance

结构图 / Structure Chart

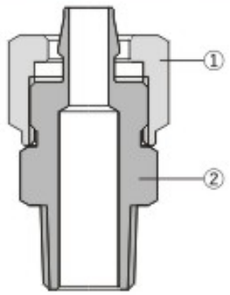

技术参数 / Specifications

使用流体/Fluid	空气，水，蒸汽/Air,Water,Steam
使用压力范围/Operating Pressure	0~1.5MPa
负压/Negative Pressure	-100KPa
耐压/Max Pressure	3.0MPa(请确认气管的使用压力范围) Please confirm the pressure range for the tube
使用温度范围/Operating Temperature	-20~140℃
适用软管/Applicable Tube	PU及尼龙管/Polyurethane and Nylon

序号	名称	材质
1	螺母/Cap Nut	SUS304/316
2	接头体/Metal Body	SUS304/316

⊖IBC-SC / IBC-SS快拧螺纹直通



MODEL			
IBC0425-01-SC(SS)	IBC0805-04-SC(SS)	IBC1008-01-SC(SS)	IBC1210-02-SC(SS)
IBC0425-02-SC(SS)	IBC0806-01-SC(SS)	IBC1008-02-SC(SS)	IBC1210-03-SC(SS)
IBC0604-01-SC(SS)	IBC0806-02-SC(SS)	IBC1008-03-SC(SS)	IBC1210-04-SC(SS)
IBC0604-02-SC(SS)	IBC0806-03-SC(SS)	IBC1008-04-SC(SS)	IBC1612-02-SC(SS)
IBC0604-03-SC(SS)	IBC0806-04-SC(SS)	IBC1208-01-SC(SS)	IBC1612-03-SC(SS)
IBC0604-04-SC(SS)	IBC1065-01-SC(SS)	IBC1208-02-SC(SS)	IBC1612-04-SC(SS)
IBC0805-01-SC(SS)	IBC1065-02-SC(SS)	IBC1208-03-SC(SS)	
IBC0805-02-SC(SS)	IBC1065-03-SC(SS)	IBC1208-04-SC(SS)	
IBC0805-03-SC(SS)	IBC1065-04-SC(SS)	IBC1210-01-SC(SS)	

⊖IBC-G-SC / IBC-G-SS快拧螺纹直通-G螺纹



MODEL			
IBC0425-G01-SC(SS)	IBC0805-G04-SC(SS)	IBC1008-G01-SC(SS)	IBC1210-G02-SC(SS)
IBC0425-G02-SC(SS)	IBC0806-G01-SC(SS)	IBC1008-G02-SC(SS)	IBC1210-G03-SC(SS)
IBC0604-G01-SC(SS)	IBC0806-G02-SC(SS)	IBC1008-G03-SC(SS)	IBC1210-G04-SC(SS)
IBC0604-G02-SC(SS)	IBC0806-G03-SC(SS)	IBC1008-G04-SC(SS)	IBC1612-G02-SC(SS)
IBC0604-G03-SC(SS)	IBC0806-G04-SC(SS)	IBC1208-G01-SC(SS)	IBC1612-G03-SC(SS)
IBC0604-G04-SC(SS)	IBC1065-G01-SC(SS)	IBC1208-G02-SC(SS)	IBC1612-G04-SC(SS)
IBC0805-G01-SC(SS)	IBC1065-G02-SC(SS)	IBC1208-G03-SC(SS)	
IBC0805-G02-SC(SS)	IBC1065-G03-SC(SS)	IBC1208-G04-SC(SS)	
IBC0805-G03-SC(SS)	IBC1065-G04-SC(SS)	IBC1210-G01-SC(SS)	

⊖IBL-SC / IBL-SS快拧螺纹弯头

可旋转/Rotatable



MODEL			
IBL0425-01-SC(SS)	IBL0805-04-SC(SS)	IBL1008-01-SC(SS)	IBL1210-02-SC(SS)
IBL0425-02-SC(SS)	IBL0806-01-SC(SS)	IBL1008-02-SC(SS)	IBL1210-03-SC(SS)
IBL0604-01-SC(SS)	IBL0806-02-SC(SS)	IBL1008-03-SC(SS)	IBL1210-04-SC(SS)
IBL0604-02-SC(SS)	IBL0806-03-SC(SS)	IBL1008-04-SC(SS)	IBL1612-02-SC(SS)
IBL0604-03-SC(SS)	IBL0806-04-SC(SS)	IBL1208-01-SC(SS)	IBL1612-03-SC(SS)
IBL0604-04-SC(SS)	IBL1065-01-SC(SS)	IBL1208-02-SC(SS)	IBL1612-04-SC(SS)
IBL0805-01-SC(SS)	IBL1065-02-SC(SS)	IBL1208-03-SC(SS)	
IBL0805-02-SC(SS)	IBL1065-03-SC(SS)	IBL1208-04-SC(SS)	
IBL0805-03-SC(SS)	IBL1065-04-SC(SS)	IBL1210-01-SC(SS)	

⊖IBL-G-SC / IBL-G-SS快拧螺纹弯头-G螺纹

可旋转/Rotatable



MODEL			
IBL0425-G01-SC(SS)	IBL0805-G04-SC(SS)	IBL1008-G01-SC(SS)	IBL1210-G02-SC(SS)
IBL0425-G02-SC(SS)	IBL0806-G01-SC(SS)	IBL1008-G02-SC(SS)	IBL1210-G03-SC(SS)
IBL0604-G01-SC(SS)	IBL0806-G02-SC(SS)	IBL1008-G03-SC(SS)	IBL1210-G04-SC(SS)
IBL0604-G02-SC(SS)	IBL0806-G03-SC(SS)	IBL1008-G04-SC(SS)	IBL1612-G02-SC(SS)
IBL0604-G03-SC(SS)	IBL0806-G04-SC(SS)	IBL1208-G01-SC(SS)	IBL1612-G03-SC(SS)
IBL0604-G04-SC(SS)	IBL1065-G01-SC(SS)	IBL1208-G02-SC(SS)	IBL1612-G04-SC(SS)
IBL0805-G01-SC(SS)	IBL1065-G02-SC(SS)	IBL1208-G03-SC(SS)	
IBL0805-G02-SC(SS)	IBL1065-G03-SC(SS)	IBL1208-G04-SC(SS)	
IBL0805-G03-SC(SS)	IBL1065-G04-SC(SS)	IBL1210-G01-SC(SS)	

⊖IBF-G-SC / IBF-G-SS快拧内螺纹直通-G螺纹



MODEL			
IBF0604-G01-SC(SS)	IBF0805-G04-SC(SS)	IBF1065-G03-SC(SS)	IBF1208-G02-SC(SS)
IBF0604-G02-SC(SS)	IBF0806-G01-SC(SS)	IBF1065-G04-SC(SS)	IBF1208-G03-SC(SS)
IBF0604-G03-SC(SS)	IBF0806-G02-SC(SS)	IBF1008-G01-SC(SS)	IBF1208-G04-SC(SS)
IBF0604-G04-SC(SS)	IBF0806-G03-SC(SS)	IBF1008-G02-SC(SS)	IBF1210-G01-SC(SS)
IBF0805-G01-SC(SS)	IBF0806-G04-SC(SS)	IBF1008-G03-SC(SS)	IBF1210-G02-SC(SS)
IBF0805-G02-SC(SS)	IBF1065-G01-SC(SS)	IBF1008-G04-SC(SS)	IBF1210-G03-SC(SS)
IBF0805-G03-SC(SS)	IBF1065-G02-SC(SS)	IBF1208-G01-SC(SS)	IBF1210-G04-SC(SS)

⊖IBZL-SC / IBZL-SS快拧螺纹弯头

不可旋转/Fixed



MODEL			
IBZL0425-01-SC(SS)	IBZL0805-02-SC(SS)	IBZL1008-01-SC(SS)	IBZL1210-01-SC(SS)
IBZL0425-02-SC(SS)	IBZL0805-03-SC(SS)	IBZL1065-02-SC(SS)	IBZL1208-02-SC(SS)
IBZL0604-M5-SC(SS)	IBZL0805-04-SC(SS)	IBZL1008-02-SC(SS)	IBZL1210-02-SC(SS)
IBZL0604-01-SC(SS)	IBZL0806-01-SC(SS)	IBZL1065-03-SC(SS)	IBZL1208-03-SC(SS)
IBZL0604-02-SC(SS)	IBZL0806-02-SC(SS)	IBZL1008-03-SC(SS)	IBZL1210-03-SC(SS)
IBZL0604-03-SC(SS)	IBZL0806-03-SC(SS)	IBZL1065-04-SC(SS)	IBZL1208-04-SC(SS)
IBZL0604-04-SC(SS)	IBZL0806-04-SC(SS)	IBZL1008-04-SC(SS)	IBZL1210-04-SC(SS)
IBZL0805-01-SC(SS)	IBZL1065-01-SC(SS)	IBZL1208-01-SC(SS)	

⊖IBU-SC / IBU-SS快拧二通



MODEL			
IBU0425-SC(SS)	IBU0604-SC(SS)	IBU0805-SC(SS)	IBU0806-SC(SS)
IBU1065-SC(SS)	IBU1008-SC(SS)	IBU1208-SC(SS)	IBU1210-SC(SS)
IBU1612-SC(SS)			
IBU0604-0425-SC(SS)	IBU1008-0604-SC(SS)	IBU1210-0604-SC(SS)	IBU1210-1008-SC(SS)
IBU0805-0604-SC(SS)	IBU1065-0805-SC(SS)	IBU1208-0805-SC(SS)	
IBU0806-0604-SC(SS)	IBU1008-0806-SC(SS)	IBU1210-0806-SC(SS)	
IBU1065-0604-SC(SS)	IBU1208-0604-SC(SS)	IBU1208-1065-SC(SS)	

⊖IBE-SC / IBE-SS快拧T三通



MODEL			
IBE0425-SC(SS)	IBE0604-SC(SS)	IBE0805-SC(SS)	IBE0806-SC(SS)
IBE1065-SC(SS)	IBE1008-SC(SS)	IBE1208-SC(SS)	IBE1210-SC(SS)
IBE1612-SC(SS)			

⊖IBM-SC / IBM-SS快拧隔板直通



MODEL			
IBM0425-SC(SS)	IBM0604-SC(SS)	IBM0805-SC(SS)	IBM0806-SC(SS)
IBM1065-SC(SS)	IBM1008-SC(SS)	IBM1208-SC(SS)	IBM1210-SC(SS)
IBM1612-SC(SS)			

⊖TCS-SC超小型快拧直通



MODEL			
TCS04-M4-SC	TCS04-M5-SC	TCS04-M6-SC	TCS06-M5-SC

⊖TLS-SC超小型快拧弯头



MODEL			
TLS04-M5-SC	TLS06-M5-SC		

316不锈钢快拧接头系列(带钢套结构)
316 Stainless Steel Push On Fittings Series(Structure with steel sleeve)



主要应用于新能源行业、激光加工
Mainly used in the New Energy Industry and Laser Processing

订购号 / Order

SBC 0805 - 01

① 型号/MODEL

② 管径/ Tube Outer Diamete

代号/Code	气管外径/O.D	气管内径/I.D
0805	Φ8	Φ5

③ 螺纹尺寸/Thread Size;

	英制锥管螺纹/Taper Pipe Thread			
代号/Code	01	02	03	04
尺寸/Size	R1/8	R1/4	R3/8	R1/2

特点 / Features

- 零件主体材料采用SUS316制成，具有很强的抗腐蚀能力
- 采用气管插入，外加螺帽旋紧方式，连接安全可靠
- 根据气管的内外径有相对应的型号可供选择

- The materials ensure Anti-Corrosion highly,all of main material made from SUS316
- Tube insertion,the nuts tightening,secure connection
- According to the Inner and Outer Dia.of air tube,it can be choose corresponding types

结构图 / Structure Chart

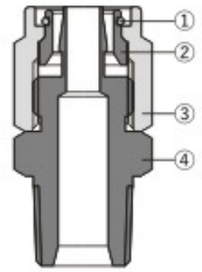

技术参数 / Specifications

使用流体/Fluid	空气，水，蒸汽/Air,Water,Steam
使用压力范围/Operating Pressure	0~1.0MPa(150psi)
耐压/Max Pressure	1.5MPa
使用环境及流体温度/Operating Temperature	-20~70℃(-4~158°F)
适用软管/Applicable Tube	PU及尼龙管/Polyurethane and Nylon

序号	名称	材质
1	挡圈/Steel Ring	SUS304
2	卡套/Cutting Ferrule	SUS316
3	螺母/Cap Nut	SUS316
4	接头体/Fittings Body	SUS316

SBL快拧螺纹弯头



MODEL			
SBL0604-01	SBL0806-02	SBL1065-02	SBL1209-02
SBL0604-02	SBL0806-03	SBL1065-03	SBL1209-03
SBL0604-03	SBL1008-02	SBL1210-02	SBL1208-02
SBL0806-01	SBL1008-03	SBL1210-03	SBL1208-03

SBC快拧螺纹直通



MODEL			
SBC0425-01	SBC0806-03	SBC1065-02	SBC1209-03
SBC0425-02	SBC0805-01	SBC1065-03	SBC1209-04
SBC0604-01	SBC0805-02	SBC1065-04	SBC1208-02
SBC0604-02	SBC0805-03	SBC1210-02	SBC1208-03
SBC0604-03	SBC1008-02	SBC1210-03	SBC1208-04
SBC0806-01	SBC1008-03	SBC1210-04	
SBC0806-02	SBC1008-04	SBC1209-02	

SBU快拧直通



MODEL			
SBU0604	SBU0805	SBU1008	SBU1209
SBU0806	SBU1065	SBU1208	SBU1210

SBE快拧三通



MODEL			
SBE0425	SBE0604	SBE0806	SBE0805
SBE1210	SBE1209		

常规型全铜快插接头
Push-in Fittings



主要应用于汽车行业、储能行业、消防设施
Mainly used in the Automotive Industry, Energy Storage Industry, and Fire Protection Facilities

特点 / Features

- 用铜制成的气动管类系统接头
- 不仅是接头壳体而且连释放环都是由铜制成，因此这些接头具有极佳的耐燃性、耐热性和防溅性能
- It's made of copper pneumatic piping Fittings
- Not only the body but also the sleeve, both of them are made from copper, which is good for flame resistance, heat resistance and splash performance

结构图 / Structure Chart

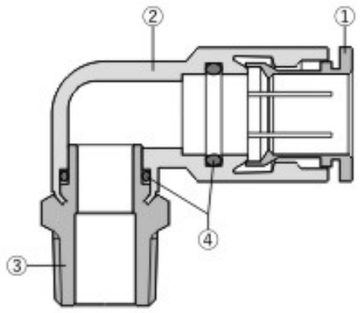

技术参数 / Specifications

使用流体/Fluid	空气，真空/Air,Vacuum
使用压力范围/Operating Pressure	0~1.0MPa
使用温度范畴/Operating Temperature	-20~80℃
适用软管/Applicable Tube	PU及尼龙管/Polyurethane and Nylon

序号	名称	材质
1	按钮(Sleeve)	镀镍铜(Brass)
2	体(Body)	镀镍铜(Brass)
3	螺纹体(Metal Body)	镀镍铜(Brass)
4	O型圈(O-Ring)	丁腈橡胶(NBR)

⊖IPCT全铜螺纹直通



MODEL			
IPCT04-M5	IPCT06-03	IPCT10-01	IPCT12-04
IPCT04-01	IPCT06-04	IPCT10-02	IPCT14-03
IPCT04-02	IPCT08-01	IPCT10-03	IPCT14-04
IPCT06-M5	IPCT08-02	IPCT10-04	IPCT16-03
IPCT06-01	IPCT08-03	IPCT12-02	IPCT16-04
IPCT06-02	IPCT08-04	IPCT12-03	

⊖IPCT-G全铜螺纹直通-G螺纹



MODEL			
IPCT04-G01	IPCT08-G01	IPCT10-G03	IPCT14-G04
IPCT04-G02	IPCT08-G02	IPCT10-G04	IPCT16-G03
IPCT06-G01	IPCT08-G03	IPCT12-G02	IPCT16-G04
IPCT06-G02	IPCT08-G04	IPCT12-G03	
IPCT06-G03	IPCT10-G01	IPCT12-G04	
IPCT06-G04	IPCT10-G02	IPCT14-G03	

⊖IPCFT全铜内螺纹直通



MODEL			
IPCFT04-M5	IPCFT06-02	IPCFT08-03	IPCFT10-04
IPCFT04-01	IPCFT06-03	IPCFT08-04	IPCFT12-02
IPCFT04-02	IPCFT06-04	IPCFT10-01	IPCFT12-03
IPCFT06-M5	IPCFT08-01	IPCFT10-02	IPCFT12-04
IPCFT06-01	IPCFT08-02	IPCFT10-03	

⊖IPCFT-G全铜内螺纹直通-G螺纹



MODEL			
IPCFT04-G01	IPCFT06-G04	IPCFT10-G01	IPCFT12-G03
IPCFT04-G02	IPCFT08-G01	IPCFT10-G02	IPCFT12-G04
IPCFT06-G01	IPCFT08-G02	IPCFT10-G03	
IPCFT06-G02	IPCFT08-G03	IPCFT10-G04	
IPCFT06-G03	IPCFT08-G04	IPCFT12-G02	

⊖IPLT全铜L型螺纹弯头



MODEL			
IPLT04-M5	IPLT06-02	IPLT10-01	IPLT14-03
IPLT04-M6	IPLT06-03	IPLT10-02	IPLT14-04
IPLT04-01	IPLT06-04	IPLT10-03	IPLT16-03
IPLT04-02	IPLT08-01	IPLT10-04	IPLT16-04
IPLT06-M5	IPLT08-02	IPLT12-02	
IPLT06-M6	IPLT08-03	IPLT12-03	
IPLT06-01	IPLT08-04	IPLT12-04	

⊖IPLT-G全铜L型螺纹弯头-G螺纹



MODEL			
IPLT04-G01	IPLT08-G01	IPLT10-G03	IPLT14-G04
IPLT04-G02	IPLT08-G02	IPLT10-G04	IPLT16-G03
IPLT06-G01	IPLT08-G03	IPLT12-G02	IPLT16-G04
IPLT06-G02	IPLT08-G04	IPLT12-G03	
IPLT06-G03	IPLT10-G01	IPLT12-G04	
IPLT06-G04	IPLT10-G02	IPLT14-G03	

⊖IPDT全铜螺纹侧三通



MODEL			
IPDT04-M5	IPDT06-02	IPDT08-03	IPDT10-04
IPDT04-01	IPDT06-03	IPDT08-04	IPDT12-02
IPDT04-02	IPDT06-04	IPDT10-01	IPDT12-03
IPDT06-M5	IPDT08-01	IPDT10-02	IPDT12-04
IPDT06-01	IPDT08-02	IPDT10-03	

⊖IPDT-G全铜螺纹侧三通-G螺纹



MODEL			
IPDT04-G01	IPDT06-G04	IPDT10-G01	IPDT12-G03
IPDT04-G02	IPDT08-G01	IPDT10-G02	IPDT12-G04
IPDT06-G01	IPDT08-G02	IPDT10-G03	
IPDT06-G02	IPDT08-G03	IPDT10-G04	
IPDT06-G03	IPDT08-G04	IPDT12-G02	

⊖IPBT全铜螺纹正三通



MODEL			
IPBT04-M5	IPBT06-02	IPBT08-03	IPBT10-04
IPBT04-01	IPBT06-03	IPBT08-04	IPBT12-02
IPBT04-02	IPBT06-04	IPBT10-01	IPBT12-03
IPBT06-M5	IPBT08-01	IPBT10-02	IPBT12-04
IPBT06-01	IPBT08-02	IPBT10-03	

⊖IPBT-G全铜螺纹正三通-G螺纹



MODEL			
IPBT04-G01	IPBT06-G04	IPBT10-G01	IPBT12-G03
IPBT04-G02	IPBT08-G01	IPBT10-G02	IPBT12-G04
IPBT06-G01	IPBT08-G02	IPBT10-G03	
IPBT06-G02	IPBT08-G03	IPBT10-G04	
IPBT06-G03	IPBT08-G04	IPBT12-G02	

⊖IPHT全铜外六角接头



MODEL			
IPHT04-01	IPHT06-03	IPHT08-04	IPHT10-04
IPHT04-02	IPHT08-01	IPHT10-01	
IPHT06-01	IPHT08-02	IPHT10-02	
IPHT06-02	IPHT08-03	IPHT10-03	

⊖IPHT-G全铜外六角接头-G螺纹



MODEL			
IPHT04-M5	IPHT06-G01	IPHT08-G02	IPHT10-G02
IPHT04-G01	IPHT06-G02	IPHT08-G03	IPHT10-G03
IPHT04-G02	IPHT06-G03	IPHT08-G04	IPHT10-G04
IPHT06-M5	IPHT08-G01	IPHT10-G01	

⊖IPMFT 全铜隔板内螺纹直通



MODEL			
IPMFT04-01	IPMFT06-03	IPMFT08-04	IPMFT10-04
IPMFT04-02	IPMFT08-01	IPMFT10-01	IPMFT12-02
IPMFT06-01	IPMFT08-02	IPMFT10-02	IPMFT12-03
IPMFT06-02	IPMFT08-03	IPMFT10-03	IPMFT12-04

⊖IPUT 全铜直通



MODEL			
IPUT04	IPUT10	IPUT16	IPUT10-08
IPUT06	IPUT12	IPUT06-04	IPUT12-10
IPUT08	IPUT14	IPUT08-06	

⊖IPVT 全铜弯头



MODEL		
IPVT04	IPVT08	IPVT12
IPVT06	IPVT10	IPVT16

⊖IPET 全铜正三通



MODEL		
IPET04	IPET12	IPET10-08-10
IPET06	IPET14	IPET12-08-12
IPET08	IPET16	IPET12-10-12
IPET10	IPET08-06-08	

⊖IPZT 全铜四通



MODEL		
IPZT04	IPZT08	IPZT12
IPZT06	IPZT10	

⊖IPYT 全铜Y三通



MODEL		
IPYT06	IPYT08	IPYT10

⊖IPMT 全铜隔板直通



MODEL		
IPMT04	IPMT08	IPMT12
IPMT06	IPMT10	

⊖IPGJT 全铜插入型直通



MODEL		
IPGJT06-04	IPGJT10-08	
IPGJT08-06	IPGJT12-10	

卡簧式全铜快插接头
NT Series by Push-in fittings with Spring



主要应用于汽车行业、储能行业、消防设施
Mainly used in the Automotive Industry, Energy Storage Industry, and Fire Protection Facilities

订购号 / Order

IPCT 06 - 01

③ 螺纹尺寸/Thread Size

	英制锥管螺纹/Taper Pipe Thread				英制直管螺纹/G Thread			
代号/Code	01	02	03	04	G01	G02	G03	G04
尺寸/Size	R1/8	R1/4	R3/8	R1/2	G1/8	G1/4	G3/8	G1/2

② 管径/ Tube Outer Diameter

	公制/Metric Size						
代号/Code	04	06	08	10	12	14	16
气管外径/Tube Outer Diameter(mm)	Φ4	Φ6	Φ8	Φ10	Φ12	Φ14	Φ16

① 型号/MODEL：NT字母开头为卡簧式全铜
NT Series by Push-in fittings with Spring

特点 / Features

- 接头体、释放环均由铜制成，具有极佳的防溅性和耐燃性
- 表面部分都是由铜镀镍处理，可以防腐蚀和污染
- 管之夹爪用不锈钢制成，长时间使用也不会弹性疲劳，造成脱落，产生事故
- Both of the body and release ring are made from the copper, which with good splash proof and flame resistance
- It is nickeled on the surface, which is good for anti-corrosion and anti-pollution
- The lock claw are made of stainless steel, it won't be elastic fatigue and cause fall off

结构图 / Structure Chart

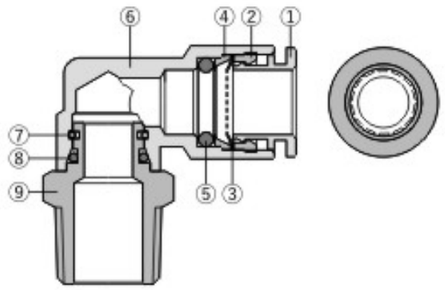

技术参数 / Specifications

使用流体/Fluid	空气，真空/Air,Vacuum
使用压力范围/Operating Pressure	0~1.0MPa(15~150psi)
耐压/Max Pressure	1.5MPa(225psi)
使用环境及流体温度/Operating Temperature	-20~70℃(-4~158°F)
适用软管/Applicable Tube	PU及尼龙管/Polyurethane and Nylon

序号	名称	材质
1	按钮(Sleeve)	镀镍铜(Brass)
2	塑料套(Plastic Sleeve)	聚甲醛(POM)
3	簧片(Lock Claws)	不锈钢(SUS)
4	压环(Back Ring)	聚甲醛(POM)
5	O型圈(O-Ring)	丁腈橡胶(NBR)
6	体(Body)	镀镍铜(Brass)
7	C型环(C-Ring)	不锈钢(SUS)
8	O型圈(O-Ring)	丁腈橡胶(NBR)
9	螺纹体(Metal Body)	镀镍铜(Brass)

⊖NTC外螺纹直通



MODEL			
NTC04-01	NTC08-01	NTC10-03	NTC12-04
NTC04-02	NTC08-02	NTC10-04	
NTC06-01	NTC08-03	NTC12-02	
NTC06-02	NTC10-02	NTC12-03	

⊖NTC-G外螺纹直通-G螺纹



MODEL			
NTC04-M5	NTC06-M6	NTC08-G03	NTC12-G03
NTC04-M6	NTC06-G01	NTC10-G02	NTC12-G04
NTC04-G01	NTC06-G02	NTC10-G03	
NTC04-G02	NTC08-G01	NTC10-G04	
NTC06-M5	NTC08-G02	NTC12-G02	

⊖NTL外螺纹旋转弯头



MODEL			
NTL04-01	NTL08-01	NTL10-03	NTL12-04
NTL04-02	NTL08-02	NTL10-04	
NTL06-01	NTL08-03	NTL12-02	
NTL06-02	NTL10-02	NTL12-03	

⊖NTL-G外螺纹旋转弯头-G螺纹



MODEL			
NTL03-M5	NTL06-M5	NTL08-G02	NTL12-G02
NTL04-M5	NTL06-M6	NTL08-G03	NTL12-G03
NTL04-M6	NTL06-G01	NTL10-G02	NTL12-G04
NTL04-G01	NTL06-G02	NTL10-G03	
NTL04-G02	NTL08-G01	NTL10-G04	

⊖NTB外螺纹旋转正三通



MODEL			
NTB04-01	NTB08-01	NTB10-03	NTB12-04
NTB04-02	NTB08-02	NTB10-04	
NTB06-01	NTB08-03	NTB12-02	
NTB06-02	NTB10-02	NTB12-03	

⊖NTB-G外螺纹旋转正三通-G螺纹



MODEL			
NTB04-G01	NTB08-G01	NTB10-G03	NTB12-G04
NTB04-G02	NTB08-G02	NTB10-G04	
NTB06-G01	NTB08-G03	NTB12-G02	
NTB06-G02	NTB10-G02	NTB12-G03	

⊖NTCF内螺纹直通



MODEL			
NTCF04-01	NTCF08-01	NTCF10-03	NTCF12-04
NTCF04-02	NTCF08-02	NTCF10-04	
NTCF06-01	NTCF08-03	NTCF12-02	
NTCF06-02	NTCF10-02	NTCF12-03	

⊖NTCF-G内螺纹直通-G螺纹



MODEL			
NTCF04-G01	NTCF08-G01	NTCF10-G03	NTCF12-G04
NTCF04-G02	NTCF08-G02	NTCF10-G04	
NTCF06-G01	NTCF08-G03	NTCF12-G02	
NTCF06-G02	NTCF10-G02	NTCF12-G03	

⊖NTLF内螺纹旋转弯头



MODEL			
NTLF04-01	NTLF08-01	NTLF10-03	NTLF12-04
NTLF04-02	NTLF08-02	NTLF10-04	
NTLF06-01	NTLF08-03	NTLF12-02	
NTLF06-02	NTLF10-02	NTLF12-03	

⊖NTLF-G内螺纹旋转弯头-G螺纹



MODEL			
NTLF04-G01	NTLF08-G01	NTLF10-G03	NTLF12-G04
NTLF04-G02	NTLF08-G02	NTLF10-G04	
NTLF06-G01	NTLF08-G03	NTLF12-G02	
NTLF06-G02	NTLF10-G02	NTLF12-G03	

⊖NTD外螺纹旋转侧三通



MODEL			
NTD04-01	NTD08-01	NTD10-03	NTD12-04
NTD04-02	NTD08-02	NTD10-04	
NTD06-01	NTD08-03	NTD12-02	
NTD06-02	NTD10-02	NTD12-03	

⊖NTD-G外螺纹旋转侧三通-G螺纹



MODEL			
NTD04-G01	NTD08-G01	NTD10-G03	NTD12-G04
NTD04-G02	NTD08-G02	NTD10-G04	
NTD06-G01	NTD08-G03	NTD12-G02	
NTD06-G02	NTD10-G02	NTD12-G03	

⊖NTH-G内六角旋转弯头-G螺纹



MODEL			
NTH04-M5	NTH06-G01	NTH08-G02	NTH10-G03
NTH04-G01	NTH06-G02	NTH08-G03	
NTH06-M5	NTH08-G01	NTH10-G02	

⊖NTH-G(2)内六角串联旋转弯头-G螺纹



MODEL			
NTH04-M5(2)	NTH06-G01(2)	NTH08-G02(2)	NTH10-G03(2)
NTH04-G01(2)	NTH06-G02(2)	NTH08-G03(2)	
NTH06-M5(2)	NTH08-G01(2)	NTH10-G02(2)	

⊖NTZL外螺纹弯头



MODEL			
NTZL04-01	NTZL06-02	NTZL10-02	
NTZL04-02	NTZL08-01	NTZL10-03	
NTZL06-01	NTZL08-02		

⊖NTBJ插入型正三通



MODEL			
NTBJ04	NTBJ08-06	NTBJ10	
NTBJ06-04	NTBJ08	NTBJ12-10	
NTBJ06	NTBJ10-08	NTBJ12	

⊖NTGJ插入型直通



MODEL			
NTGJ04-03	NTGJ10-06	NTGJ12-10	
NTGJ06-04	NTGJ10-08		
NTGJ08-04	NTGJ12-06		
NTGJ08-06	NTGJ12-08		

⊖NTOC螺纹圆直通



MODEL			
NTOC04-01	NTOC08-01	NTOC10-03	NTOC12-04
NTOC04-02	NTOC08-02	NTOC10-04	
NTOC06-01	NTOC08-03	NTOC12-02	
NTOC06-02	NTOC10-02	NTOC12-03	

⊖NTLJ插入型弯头



MODEL			
NTLJ04	NTLJ10	NTLJ08-06	
NTLJ06	NTLJ12	NTLJ10-08	
NTLJ08	NTLJ06-04	NTLJ12-10	

⊖NTE联管正三通



MODEL			
NTE04	NTE06	NTE08	NTE10
NTE12			

⊖NTY联管Y三通



MODEL			
NTY06	NTY08	NTY10	

⊖NTU联管直二通



MODEL			
NTU03	NTU08	NTU06-04	NTU12-10
NTU04	NTU10	NTU08-06	
NTU06	NTU12	NTU10-08	

⊖NTM联管隔板直通



MODEL			
NTM04	NTM06	NTM08	NTM10
NTM12			

⊖NTV联管弯头



MODEL			
NTV04	NTV06	NTV08	NTV10
NTV12			

AT 系列全铜快插接头
Push-in Fittings with AT series



主要应用于汽车行业、储能行业、消防设施
Mainly used in the Automotive Industry, Energy Storage Industry, and Fire Protection Facilities

特点 / Features

- 此系列为全铜快插式的改进型结构
- 管接头材料选用黄铜镀镍，具有极佳的防溅性和耐燃性
- 具有更高的耐压性能，耐压可达2.5Mpa
- 管接头内密封用O型圈随着时间变化耗损时，可以很容易的更换，产品使用寿命长
- 产品可根据使用流体介质或使用环境的不同,选用合适材质的密封O型圈

- This series are improved structure of Push-in fittings
- The Push-in fittings are made from the copper with nickeled, which with good splash proof and flame resistance
- It has higher withstand voltage performance, and the withstand voltage can reach 2.5MPa
- When the O-ring for the inner seal of the push-in fittings are worn out over time, it can be easily replaced, and the product have long service life
- According to the different fluid medium or environment, the sealing O-ring of appropriate material can be selected

结构图 / Structure Chart

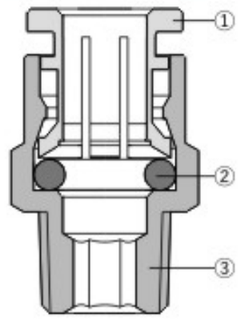

技术参数 / Specifications

使用流体/Fluid	空气，真空/Air,Vacuum
使用压力范围/Operating Pressure	0~2.5MPa(360psi)
使用环境及流体温度/Operating Temperature	-30~80℃(-22~176°F)
适用软管/Applicable Tube	PU及尼龙管/Polyurethane and Nylon

序号	名称	材质
1	按钮(Sleeve)	镀镍铜(Brass)
2	O型圈(O-Ring)	丁腈橡胶(NBR)
3	铜体(Metal Body)	镀镍铜(Brass)

ATC全铜螺纹直通



MODEL			
ATC04-01	ATC08-01	ATC10-03	ATC14-03
ATC04-02	ATC08-02	ATC10-04	ATC14-04
ATC06-01	ATC08-03	ATC12-01	ATC16-02
ATC06-02	ATC08-04	ATC12-02	ATC16-03
ATC06-03	ATC10-01	ATC12-03	ATC16-04
ATC06-04	ATC10-02	ATC12-04	ATC16-06

ATC-G全铜螺纹直通-G螺纹



MODEL			
ATC04-M5	ATC06-G03	ATC10-G01	ATC12-G03
ATC04-G01	ATC06-G04	ATC10-G02	ATC12-G04
ATC04-G02	ATC08-G01	ATC10-G03	ATC14-G03
ATC06-M5	ATC08-G02	ATC10-G04	ATC14-G04
ATC06-G01	ATC08-G03	ATC12-G01	ATC16-G03
ATC06-G02	ATC08-G04	ATC12-G02	ATC16-G04

ATOC全铜圆螺纹直通



MODEL			
ATOC04-01	ATOC08-01	ATOC10-02	ATOC12-02
ATOC06-01	ATOC08-02	ATOC10-03	ATOC12-03
ATOC06-02	ATOC08-03	ATOC10-04	ATOC12-04

ATOC-G全铜圆螺纹直通-G螺纹



MODEL			
ATOC04-M5	ATOC06-G01	ATOC08-G02	ATOC10-G03
ATOC04-G01	ATOC06-G02	ATOC08-G03	ATOC10-G04
ATOC06-M5	ATOC08-G01	ATOC10-G02	ATOC12-G02

ATCF全铜内螺纹直通



MODEL			
ATCF04-M5	ATCF06-G02	ATCF08-G03	ATCF10-G04
ATCF04-G01	ATCF06-G03	ATCF08-G04	ATCF12-G01
ATCF04-G02	ATCF06-G04	ATCF10-G01	ATCF12-G02
ATCF06-M5	ATCF08-G01	ATCF10-G02	ATCF12-G03
ATCF06-G01	ATCF08-G02	ATCF10-G03	ATCF12-G04

ATMF全铜隔板内螺纹直通



MODEL			
ATMF04-G01	ATMF08-G01	ATMF10-G03	ATMF12-G04
ATMF06-G01	ATMF08-G02	ATMF10-G04	
ATMF06-G02	ATMF08-G03	ATMF12-G03	

ATL全铜L型螺纹弯头



MODEL			
ATL04-01	ATL08-01	ATL10-03	ATL14-03
ATL04-02	ATL08-02	ATL10-04	ATL14-04
ATL06-01	ATL08-03	ATL12-01	ATL16-02
ATL06-02	ATL08-04	ATL12-02	ATL16-03
ATL06-03	ATL10-01	ATL12-03	ATL16-04
ATL06-04	ATL10-02	ATL12-04	ATL16-06

ATL-G全铜L型螺纹弯头-G螺纹



MODEL			
ATL04-M5	ATL06-G03	ATL10-G01	ATL12-G03
ATL04-G01	ATL06-G04	ATL10-G02	ATL12-G04
ATL04-G02	ATL08-G01	ATL10-G03	ATL14-G03
ATL06-M5	ATL08-G02	ATL10-G04	ATL14-G04
ATL06-G01	ATL08-G03	ATL12-G01	ATL16-G03
ATL06-G02	ATL08-G04	ATL12-G02	ATL16-G04

ATDL 全铜新型螺纹弯头



MODEL			
ATDL04-M5	ATDL04-02	ATDL06-02	
ATDL04-01	ATDL06-01		

ATDL-G 全铜新型螺纹弯头-G螺纹



MODEL			
ATDL04-G01	ATDL06-G01		

ATLL全铜加长L型螺纹弯头



MODEL			
ATLL04-01	ATLL06-02	ATLL08-02	ATLL10-02
ATLL06-01	ATLL08-01	ATLL10-01	

ATLL-G全铜加长L型螺纹弯头-G螺纹



MODEL			
ATLL04-M5	ATLL10-G02	ATLL10-G03	

ATB全铜外螺纹正三通



MODEL			
ATB04-01	ATB08-01	ATB10-03	ATB14-03
ATB04-02	ATB08-02	ATB10-04	ATB14-04
ATB06-01	ATB08-03	ATB12-01	ATB16-03
ATB06-02	ATB08-04	ATB12-02	ATB16-04
ATB06-03	ATB10-01	ATB12-03	
ATB06-04	ATB10-02	ATB12-04	

ATB-G全铜外螺纹正三通-G螺纹



MODEL			
ATB04-M5	ATB06-G03	ATB10-G02	ATB12-G04
ATB04-G01	ATB08-G01	ATB10-G03	ATB14-G03
ATB04-G02	ATB08-G02	ATB10-G04	ATB14-G04
ATB06-M5	ATB08-G03	ATB12-G01	
ATB06-G01	ATB08-G04	ATB12-G02	
ATB06-G02	ATB10-G01	ATB12-G03	

ATD全铜外螺纹侧三通



MODEL			
ATD04-01	ATD08-01	ATD10-01	ATD12-02
ATD04-02	ATD08-02	ATD10-02	ATD12-03
ATD06-01	ATD08-03	ATD10-03	ATD12-04
ATD06-02	ATD08-04	ATD10-04	

ATD-G全铜外螺纹侧三通-G螺纹



MODEL			
ATD04-M5	ATD06-G01	ATD08-G03	ATD10-G04
ATD04-G01	ATD06-G02	ATD10-G01	ATD12-G02
ATD04-G02	ATD08-G01	ATD10-G02	ATD12-G03
ATD06-M5	ATD08-G02	ATD10-G03	ATD12-G04

ATH全铜外六角弯头



MODEL			
ATH04-01	ATH06-04	ATH10-01	ATH12-03
ATH04-02	ATH08-01	ATH10-02	ATH12-04
ATH06-01	ATH08-02	ATH10-03	
ATH06-02	ATH08-03	ATH10-04	
ATH06-03	ATH08-04	ATH12-02	

ATH-G全铜外六角弯头-G螺纹



MODEL			
ATH04-M5	ATH06-G02	ATH10-G01	ATH12-G04
ATH04-G01	ATH08-G01	ATH10-G02	
ATH06-M5	ATH08-G02	ATH10-G03	
ATH06-G01	ATH08-G03	ATH12-G03	

ATX全铜Y型螺纹三通



MODEL			
ATX04-01	ATX06-04	ATX10-01	ATX12-03
ATX04-02	ATX08-01	ATX10-02	ATX12-04
ATX06-01	ATX08-02	ATX10-03	
ATX06-02	ATX08-03	ATX10-04	
ATX06-03	ATX08-04	ATX12-02	

ATX-G全铜Y型螺纹三通-G螺纹



MODEL			
ATX04-M5	ATX06-G01	ATX08-G02	ATX12-G04
ATX06-M5	ATX08-G01	ATX10-G03	

ATH G-R全铜外六角螺纹弯头



MODEL			
ATHG01-01	ATHG02-02		

ATH G-G全铜外六角螺纹弯头-G螺纹



MODEL			
ATHG01-G01	ATHG02-G02		

ATU全铜直通



MODEL			
ATU04	ATU12	ATU08-04	ATU12-08
ATU06	ATU14	ATU08-06	ATU12-10
ATU08	ATU16	ATU10-06	ATU16-12
ATU10	ATU06-04	ATU10-08	ATU16-14

ATE全铜正三通



MODEL			
ATE04	ATE12	ATE08-06-08	ATE12-10-12
ATE06	ATE14	ATE10-06-10	ATE16-12-16
ATE08	ATE16	ATE10-08-10	ATE16-14-16
ATE10	ATE06-04-06	ATE12-08-12	

ATLF全铜内螺纹弯头



MODEL			
ATLF04-M5	ATLF06-G03	ATLF08-G04	ATLF12-G02
ATLF04-G01	ATLF06-G04	ATLF10-G01	ATLF12-G03
ATLF04-G02	ATLF08-G01	ATLF10-G02	ATLF12-G04
ATLF06-G01	ATLF08-G02	ATLF10-G03	
ATLF06-G02	ATLF08-G03	ATLF10-G04	

ATY全通Y型三通



MODEL			
ATY04	ATY12	ATY16	ATY12-08
ATY06	ATY14	ATY08-06	ATY12-10
ATY08	ATY10	ATY10-08	

ATZ全通四通



MODEL			
ATZ04	ATZ08	ATZ12	
ATZ06	ATZ10		

ATM全铜隔板直通



MODEL			
ATM04	ATM08	ATM12	ATM16
ATM06	ATM10	ATM14	

ATV全铜弯头



MODEL			
ATV04	ATV08	ATV12	ATV16
ATV06	ATV10	ATV14	

DT系列全铜双密封快插接头
Push-in Fittings with DT series



主要应用于汽车行业、储能行业、消防设施
Mainly used in the Automotive Industry, Energy Storage Industry, and Fire Protection Facilities

特点 / Features

- 插管部分内径上采用双密封结构设计,能在连接管表面被刮擦情况下还能有效密封
- 在反复插拔使用时,不影响产品的密封性

- Double sealing structure design is adopted on the inner diameter of the intubation part, which can effectively seal when the surface of the connecting pipe is scratched
- The sealing performance of the product will not be affected during repeated plugging and use

结构图 / Structure Chart

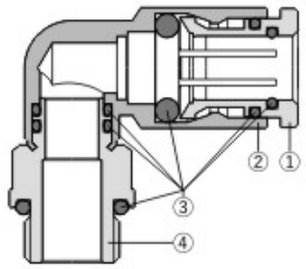

技术参数 / Specifications

使用流体/Fluid	空气，真空/Air,Vacuum
使用压力范围/Operating Pressure	0-2.5MPa(360psi)
使用环境及流体温度/Operating Temperature	-30-80℃(-22-176°F)
适用软管/Applicable Tube	PU及尼龙管/Polyurethane and Nylon

序号	名称	材质
1	按钮(Sleeve)	镀镍铜(Brass)
2	体(Body)	镀镍铜(Brass)
3	O型圈(O-Ring)	丁腈橡胶(NBR)
4	螺纹体(Metal Body)	镀镍铜(Brass)

⊖DTC全铜双密封螺纹直通



MODEL			
DTC06-G01	DTC06-G02	DTC08-G01	DTC08-G02

⊖DTL全铜双密封L型螺纹弯头



MODEL			
DTL06-G01	DTL06-G02	DTL08-G01	DTL08-G02

⊖DTB全铜双密封螺纹正三通



MODEL			
DTB06-G01	DTB06-G02	DTB08-G01	DTB08-G02

⊖DTU全铜双密封直二通



MODEL			
DTU06	DTU08		

⊖DTE全铜双密封正三通



MODEL			
DTE06	DTE08		

⊖DTPF全铜双密封管帽



MODEL			
DTPF06	DTPF08		

⊖DTV全铜双密封弯头



MODEL			
DTV06	DTV08		

DOT认证型全铜快插接头
Push-in fittings with DOT serie



主要应用于汽车行业、储能行业、消防设施
Mainly used in the Automotive Industry, Energy Storage Industry, and Fire Protection Facilities

特点 / Features

- 专为拖车、卡车等DOT应用设计，主要用于车辆气制动系统
- 快插设计使得安装和拆卸都非常方便
- 内嵌支撑套可以保证连接管在温度剧烈变化下产品的可靠性和稳定性
- 螺纹表面涂有专用密封胶，保证螺纹连接时有效密封

- Specially designed for DOT applications such as trailers and trucks, mainly used for vehicle air brake systems
- One-touch design makes installation and disassembly very convenient.
- The embedded support sleeve can ensure the reliability and stability of the connecting tube under drastic temperature changes
- The threaded surface is coated with specialized sealant to ensure effective sealing during thread connection

技术参数 / Specifications

使用流体/Fluid	空气 / Air
使用压力范围/Operating Pressure	0~1.7MPa(250psi)
使用环境及流体温度/Operating Temperature	-40~90℃
适用软管/Applicable Tube	尼龙管 / SAE J844 type A&B nylon tubing

⊖ATC-DOT



MODEL			
ATC1/4-N1/16-DOT	ATC3/8-N02-DOT	ATC1/2-N03-DOT	ATC3/4-N04-DOT
ATC1/4-N01-DOT	ATC3/8-N03-DOT	ATC1/2-N04-DOT	ATC3/4-N06-DOT
ATC1/4-N02-DOT	ATC3/8-N04-DOT	ATC5/8-N03-DOT	
ATC3/8-N01-DOT	ATC1/2-N02-DOT	ATC5/8-N04-DOT	

⊖ATL-DOT



MODEL			
ATL1/4-N01-DOT	ATL3/8-N02-DOT	ATL1/2-N03-DOT	
ATL1/4-N02-DOT	ATL3/8-N03-DOT	ATL1/2-N04-DOT	
ATL1/4-N03-DOT	ATL3/8-N04-DOT	ATL5/8-N03-DOT	
ATL3/8-N01-DOT	ATL1/2-N02-DOT	ATL5/8-N04-DOT	

ATL 45-DOT



MODEL			
ATL45 1/4-N01-DOT	ATL45 3/8-N02-DOT	ATL45 1/2-N02-DOT	ATL45 5/8-N04-DOT
ATL45 1/4-N02-DOT	ATL45 3/8-N03-DOT	ATL45 1/2-N03-DOT	
ATL45 3/8-N01-DOT	ATL45 3/8-N04-DOT	ATL45 1/2-N04-DOT	

ATB-DOT



MODEL			
ATB1/4-N01-DOT	ATB3/8-N02-DOT	ATB1/2-N03-DOT	
ATB1/4-N02-DOT	ATB3/8-N03-DOT	ATB1/2-N04-DOT	
ATB3/8-N01-DOT	ATB1/2-N02-DOT		

ATU-DOT



MODEL			
ATU1/4-DOT	ATU1/2-DOT	ATU3/4-DOT	
ATU3/8-DOT	ATU5/8-DOT		

ATD-DOT



MODEL			
ATD1/4-N01-DOT	ATD3/8-N02-DOT	ATD1/2-N03-DOT	
ATD1/4-N02-DOT	ATD3/8-N03-DOT		

ATE-DOT



MODEL			
ATE1/4-DOT	ATE3/8-DOT	ATE1/2-DOT	ATE5/8-DOT

塑料按钮全铜快插接头
Push-in Fittings



主要应用于汽车行业、储能行业、消防设施
Mainly used in the Automotive Industry, Energy Storage Industry, and Fire Protection Facilities

订购号 / Order

IPCP 06 - 01 - □

① 型号/MODEL

② 管径/ Tube Outer Diameter

	公制/Metric Size				
代号/Code	04	06	08	10	12
气管外径/Tube Outer Diameter(mm)	Φ4	Φ6	Φ8	Φ10	Φ12

③ 螺纹尺寸/Thread Size;

	英制锥管螺纹/Taper Pipe Thread				英制直管螺纹/G Thread				公制螺纹/Mertric Thread	
代号/Code	01	02	03	04	G01	G02	G03	G04	M5	M6
尺寸/Size	R1/8	R1/4	R3/8	R1/2	G1/8	G1/4	G3/8	G1/2	M5X0.8	M6X1

④ 塑料帽颜色/Color

特点 / Features

- 除释放环外，接头壳体都由铜制成，接头可靠性佳，使用寿命长，防腐性好并具有一定的防溅性能
- 旋转部位采用金属间扩口方式连接，安全可靠，耐压性好

- Except release ring, the body is made of copper. The fittings has good reliability, long service life, good anti-corrosion and certain anti-splash performance
- Rotating parts are connected by intermetallic expansion, which is safe, reliable and good pressure resistance

结构图 / Structure Chart

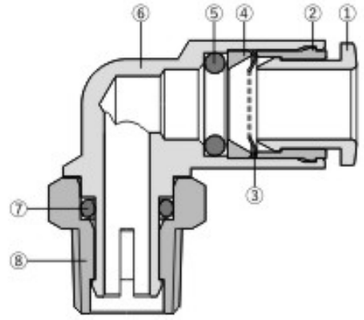

技术参数 / Specifications

序号	名称	材质
1	按钮(Sleeve)	聚甲醛(POM)
2	塑料套(Plastic Sleeve)	聚甲醛(POM)
3	簧片(Lock Claws)	不锈钢(SUS)
4	压环(Back Ring)	聚甲醛(POM)
5	O型圈(O-Ring)	丁腈橡胶(NBR)
6	体(Body)	镀镍铜(Brass)
7	O型圈(O-Ring)	丁腈橡胶(NBR)
8	螺纹体(Metal Body)	镀镍铜(Brass)

⊖IPCP全铜塑料按钮螺纹直通



MODEL			
IPCP04-01	IPCP08-01	IPCP10-03	IPCP12-04
IPCP04-02	IPCP08-02	IPCP10-04	
IPCP06-01	IPCP08-03	IPCP12-02	
IPCP06-02	IPCP10-02	IPCP12-03	

⊖IPCP-G全铜塑料按钮螺纹直通-G螺纹



MODEL			
IPCP04-M5	IPCP06-G01	IPCP08-G02	IPCP10-G04
IPCP04-G01	IPCP06-G02	IPCP08-G03	IPCP12-G02
IPCP04-G02	IPCP06-G03	IPCP10-G02	IPCP12-G03
IPCP06-M5	IPCP08-G01	IPCP10-G03	IPCP12-G04

⊖IPLP全铜塑料按钮L型螺纹弯头



MODEL			
IPLP04-01	IPLP08-01	IPLP10-03	IPLP12-04
IPLP04-02	IPLP08-02	IPLP10-04	
IPLP06-01	IPLP08-03	IPLP12-02	
IPLP06-02	IPLP10-02	IPLP12-03	

⊖IPLP-G全铜塑料按钮L型螺纹弯头-G螺纹



MODEL			
IPLP04-M5	IPLP06-G01	IPLP08-G03	IPLP12-G02
IPLP04-G01	IPLP06-G02	IPLP10-G02	IPLP12-G03
IPLP04-G02	IPLP08-G01	IPLP10-G03	IPLP12-G04
IPLP06-M5	IPLP08-G02	IPLP10-G04	

⊖IPDP全铜塑料按钮螺纹侧三通



MODEL			
IPDP04-01	IPDP08-01	IPDP10-03	IPDP12-04
IPDP04-02	IPDP08-02	IPDP10-04	
IPDP06-01	IPDP08-03	IPDP12-02	
IPDP06-02	IPDP10-02	IPDP12-03	

⊖IPDP-G全铜塑料按钮螺纹侧三通-G螺纹



MODEL			
IPDP04-M5	IPDP06-G01	IPDP08-G03	IPDP12-G02
IPDP04-G01	IPDP06-G02	IPDP10-G02	IPDP12-G03
IPDP04-G02	IPDP08-G01	IPDP10-G03	IPDP12-G04
IPDP06-M5	IPDP08-G02	IPDP10-G04	

⊖IPMP全铜隔板直通



MODEL			
IPMP04	IPMP06	IPMP08	IPMP10
IPMP12			

⊖IPUP全铜塑料按钮直通



MODEL			
IPUP04	IPUP06	IPUP08	IPUP10
IPUP12			

⊖IPBP全铜塑料按钮螺纹正三通



MODEL			
IPBP04-01	IPBP08-01	IPBP10-03	IPBP12-04
IPBP04-02	IPBP08-02	IPBP10-04	
IPBP06-01	IPBP08-03	IPBP12-02	
IPBP06-02	IPBP10-02	IPBP12-03	

⊖IPBP-G铜塑料按钮螺纹正三通-G螺纹



MODEL			
IPBP04-M5	IPBP06-G01	IPBP08-G03	IPBP12-G02
IPBP04-G01	IPBP06-G02	IPBP10-G02	IPBP12-G03
IPBP04-G02	IPBP08-G01	IPBP10-G03	IPBP12-G04
IPBP06-M5	IPBP08-G02	IPBP10-G04	

⊖IPVP全铜塑料按钮弯头



MODEL			
IPVP04	IPVP06	IPVP08	IPVP10
IPVP12			

⊖IPHP-G全铜塑料按钮外六角接头-G螺纹



MODEL			
IPHP04-M5	IPHP06-G01	IPHP08-G02	IPHP10-G03
IPHP04-G01	IPHP06-G02	IPHP08-G03	
IPHP06-M5	IPHP08-G01	IPHP10-G02	

⊖IPEP全铜塑料按钮正三通



MODEL			
IPEP04	IPEP06	IPEP08	IPEP10
IPEP12			

常规型全铜快拧接头
Push On Fittings



主要应用于汽车行业、激光加工、模具制造
Mainly used in the Automotive Industry, Laser Processing, and Mold Manufacturing

订购号 / Order

IBC 06 - 01 - □ - □

⑤ 螺母种类/Nut Type

代号/Code	空白/Blank	S
种类/Type	滚花/Knurling	六角/Hexagon

④ 内径代号/I.D Code

外径/O.D		4	6	8	10	12	14	16
代号/Code	空白/Blank	4X2.5	6X4	8X6	10X8	12X10	14X10	16X12
	A			8X5	10X6.5	12X8		16X13
	B				10X7	12X9		

③ 螺纹尺寸/Thread Size;

	英制锥管螺纹/Taper Pipe Thread				英制直管螺纹/G Thread				公制螺纹/Mertric Thread
代号/Code	01	02	03	04	G01	G02	G03	G04	M5
尺寸/Size	R1/8	R1/4	R3/8	R1/2	G1/8	G1/4	G3/8	G1/2	M5X0.8

② 管径/ Tube Outer Diameter

	公制/Metric Size						
代号/Code	04	06	08	10	12	14	16
气管外径/Tube Outer Diameter(mm)	Φ4	Φ6	Φ8	Φ10	Φ12	Φ14	Φ16

① 型号/MODEL

结构图 / Structure Chart

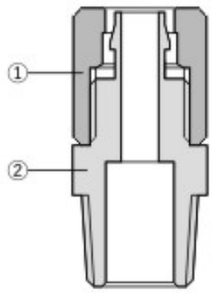

技术参数 / Specifications

序号	名称	材质
1	按钮(Sleeve)	镀镍铜(Brass)
2	体(Body)	镀镍铜(Brass)

⊖IBU 快拧直通



MODEL			
IBU04	IBU10	IBU08-06	
IBU06	IBU12	IBU10-08	
IBU08	IBU16	IBU12-10	

⊖IBV 快拧弯头



MODEL			
IBV04	IBV06	IBV08	IBV10
IBV12			

⊖IBE 快拧正三通



MODEL			
IBE04	IBE08	IBE12	IBE08-06-08
IBE06	IBE10	IBE16	IBE10-08-10

⊖IBZL 快拧不旋转螺纹弯头



MODEL			
IBZL06-01	IBZL08-02	IBZL10-02	IBZL12-03
IBZL06-02	IBZL08-03	IBZL10-03	IBZL12-04
IBZL06-03	IBZL08-04	IBZL10-04	
IBZL08-01	IBZL10-01	IBZL12-02	

⊖IBC 快拧螺纹直通



MODEL			
IBC04-M5	IBC06-03	IBC10-03	IBC14-04
IBC04-01	IBC08-01	IBC10-04	IBC16-02
IBC04-02	IBC08-02	IBC12-02	IBC16-03
IBC06-M5	IBC08-03	IBC12-03	IBC16-04
IBC06-01	IBC08-04	IBC12-04	IBC16-06
IBC06-02	IBC10-02	IBC14-03	

⊖IBC-G 快拧螺纹直通-G螺纹



MODEL			
IBC04-G01	IBC08-G01	IBC10-G03	IBC16-G04
IBC04-G02	IBC08-G02	IBC10-G04	
IBC06-G01	IBC08-G03	IBC12-G02	
IBC06-G02	IBC08-G04	IBC12-G03	
IBC06-G03	IBC10-G01	IBC12-G04	
IBC06-G04	IBC10-G02	IBC14-G03	

⊖IBL快拧L型螺纹弯头



MODEL			
IBL04-M5	IBL06-02	IBL08-04	IBL12-03
IBL04-01	IBL06-03	IBL10-02	IBL12-04
IBL04-02	IBL08-01	IBL10-03	IBL16-03
IBL06-M5	IBL08-02	IBL10-04	IBL16-04
IBL06-01	IBL08-03	IBL12-02	

⊖IBL-G快拧L型螺纹弯头-G螺纹



MODEL			
IBL04-G01	IBL08-G01	IBL10-G02	IBL12-G04
IBL04-G02	IBL08-G02	IBL10-G03	IBL16-G04
IBL06-G01	IBL08-G03	IBL10-G04	
IBL06-G02	IBL08-G04	IBL12-G02	
IBL06-G03	IBL10-G01	IBL12-G03	

⊖IBST快拧螺纹侧三通



MODEL			
IBST04-M5	IBST06-02	IBST08-03	IBST10-04
IBST04-01	IBST06-03	IBST08-04	IBST12-02
IBST04-02	IBST08-01	IBST10-02	IBST12-03
IBST06-01	IBST08-02	IBST10-03	IBST12-04

⊖IBST-G快拧螺纹侧三通-G螺纹



MODEL			
IBST04-G01	IBST06-G03	IBST08-G04	IBST12-G02
IBST04-G02	IBST08-G01	IBST10-G02	IBST12-G03
IBST06-G01	IBST08-G02	IBST10-G03	IBST12-G04
IBST06-G02	IBST08-G03	IBST10-G04	

⊖IBT快拧螺纹正三通



MODEL			
IBT04-M5	IBT06-02	IBT08-03	IBT10-04
IBT04-01	IBT06-03	IBT08-04	IBT12-02
IBT04-02	IBT08-01	IBT10-02	IBT12-03
IBT06-01	IBT08-02	IBT10-03	IBT12-04

⊖IBT-G快拧螺纹正三通-G螺纹



MODEL			
IBT04-G01	IBT06-G03	IBT08-G04	IBT10-G04
IBT04-G02	IBT08-G01	IBT10-G01	IBT12-G02
IBT06-G01	IBT08-G02	IBT10-G02	IBT12-G03
IBT06-G02	IBT08-G03	IBT10-G03	IBT12-G04

⊖IBF快拧内螺纹直通



MODEL			
IBF04-01	IBF08-01	IBF10-02	IBF12-02
IBF06-01	IBF08-02	IBF10-03	IBF12-03
IBF06-02	IBF08-03	IBF10-04	IBF12-04

⊖IBF-G快拧内螺纹直通-G螺纹



MODEL			
IBF04-G01	IBF08-G01	IBF10-G01	IBF12-G02
IBF06-G01	IBF08-G02	IBF10-G02	IBF12-G03
IBF06-G02	IBF08-G03	IBF10-G03	IBF12-G04
IBF06-G03	IBF08-G04	IBF10-G04	

⊖IBH快拧外六角接头



MODEL			
IBH04-01	IBH06-03	IBH08-03	IBH10-03
IBH04-02	IBH06-04	IBH08-04	IBH10-04
IBH06-01	IBH08-01	IBH10-01	IBH12-03
IBH06-02	IBH08-02	IBH10-02	IBH12-04

⊖IBM快拧隔板直通



MODEL			
IBM06	IBM08	IBM10	

超小型迷你全铜快拧接头
Mini Compression Fittings



主要应用于汽车行业、激光加工、模具制造
Mainly used in the Automotive Industry, Laser Processing, and Mold Manufacturing

订购号 / Order

TC 04 - M5

③ 螺纹尺寸/Thread Size

	英制锥管螺纹/Taper Pipe Thread		公制螺纹/Mertric Thread		
代号/Code	01	02	M3	M5	M6
尺寸/Size	R1/8	R1/4	M3X0.5	M5X0.8	M6X1

② 管径/ Tube Outer Diameter

	公制/Metric Size			
代号/Code	03	04	06	08
气管外径/Tube Outer Diameter(mm)	Φ3XΦ2	Φ4XΦ2.5	Φ6XΦ4	Φ8XΦ5.5

① 型号/MODEL

特点 / Features

- 迷你压合型接头
- 广泛的应用尼龙管，并且也能承受高压

- The Mini Compression Fittings
- The Mini Compression Fittings are used in Nylon Tube extensively and are able to bear high pressure

结构图 / Structure Chart

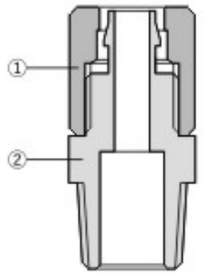

技术参数 / Specifications

使用流体/Fluid	空气（无其他的气体和液体） Air(no other gases or liquids)
使用压力范围/Operating Pressure	0~1.0MPa(150psi)
负压/Negative Pressure	-100Kpa(-29.5 in·Hg)
使用温度范畴/Operating Temperature	0~60℃(32~140°F)
适用软管/Applicable Tube	PU及尼龙管/Polyurethane and Nylon

序号	名称	材质
1	螺帽(Cap Nut)	镀镍铜(Brass)
2	铜体(Metal Body)	镀镍铜(Brass)

⊖TC压合型直通



MODEL				
TC03-M3	TC03-M5	TC04-M3	TC04-M5	TC04-M6
TC04-01	TC04-G01	TC06-M5	TC06-M6	TC06-G01

⊖TL压合型弯头



MODEL				
TL03-M5	TL04-M3	TL04-M5	TL04-M6	TL04-G01
TL06-M6	TL06-M5	TL06-G01		

⊖TCS 直通



MODEL	
TCS04-M5	TCS06-M5

⊖TLS 弯头



MODEL	
TLS04-M5	TLS06-M5

⊖TLSM 弯头



MODEL	
TLSM04-M5	TLSM06-M5

说明：此接头为TC和TL产品改进型；其功能相同，但安装尺寸更小
Note:This fitting is an improved version of TC and TL; with the same function but smaller installation size

塑料压合型接头
Compression Fittings

⊖PTL压合型塑料直角



MODEL				
PTL06-01	PTL06-02	PTL08-01	PTL08-02	

⊖PTC压合型塑料直通



MODEL				
PTC06-01	PTC06-02	PTC08-01	PTC08-02	

全铜型卡套接头
Compression Fittings



订购号 / Order

IKC 06 - 01

③ 螺纹尺寸/Thread Size

	英制锥管螺纹/Taper Pipe Thread				英制直管螺纹/G Thread			
代号/Code	01	02	03	04	G01	G02	G03	G04
尺寸/Size	R1/8	R1/4	R3/8	R1/2	G1/8	G1/4	G3/8	G1/2

② 管径/ Tube Outer Diameter

	公制/Metric Size				
代号/Code	04	06	08	10	12
气管外径/Tube Outer Diameter(mm)	Φ4	Φ6	Φ8	Φ10	Φ12

① 型号/MODEL

结构图 / Structure Chart

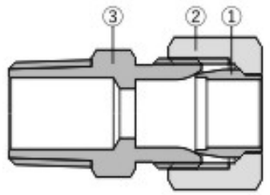

技术参数 / Specifications

序号	名称	材质
1	卡套(Cutting Ferrule)	铜酸洗(Acid Picking)
2	螺帽(Cap Nut)	镀镍铜(Brass)
3	铜体(Metal Body)	镀镍铜(Brass)

⊖IKC卡套螺纹直通



MODEL			
IKC04-01	IKC06-03	IKC08-04	IKC12-02
IKC04-02	IKC08-01	IKC10-02	IKC12-03
IKC06-01	IKC08-02	IKC10-03	IKC12-04
IKC06-02	IKC08-03	IKC10-04	

⊖IKC-G卡套螺纹直通-G螺纹



MODEL			
IKC04-G01	IKC06-G03	IKC08-G04	IKC12-G02
IKC04-G02	IKC08-G01	IKC10-G02	IKC12-G03
IKC06-G01	IKC08-G02	IKC10-G03	IKC12-G04
IKC06-G02	IKC08-G03	IKC10-G04	

⊖IKL卡套L型螺纹弯头



MODEL			
IKL04-01	IKL06-03	IKL08-04	IKL12-02
IKL04-02	IKL08-01	IKL10-02	IKL12-03
IKL06-01	IKL08-02	IKL10-03	IKL12-04
IKL06-02	IKL08-03	IKL10-04	

⊖IKL-G卡套L型螺纹弯头-G螺纹



MODEL			
IKL04-G01	IKL06-G03	IKL08-G03	IKL10-G04
IKL04-G02	IKL06-G04	IKL08-G04	IKL12-G02
IKL06-G01	IKL08-G01	IKL10-G02	IKL12-G03
IKL06-G02	IKL08-G02	IKL10-G03	IKL12-G04

⊖IKT卡套螺纹正三通



MODEL			
IKT04-01	IKT06-03	IKT08-04	IKT12-02
IKT04-02	IKT08-01	IKT10-02	IKT12-03
IKT06-01	IKT08-02	IKT10-03	IKT12-04
IKT06-02	IKT08-03	IKT10-04	

⊖IKT-G卡套螺纹正三通-G螺纹



MODEL			
IKT04-G02	IKT06-G03	IKT08-G04	IKT12-G02
IKT04-G01	IKT08-G01	IKT10-G02	IKT12-G03
IKT06-G02	IKT08-G02	IKT10-G03	IKT12-G04
IKT06-G01	IKT08-G03	IKT10-G04	

⊖IKST卡套螺纹侧三通



MODEL			
IKST04-01	IKST06-03	IKST08-04	IKST12-02
IKST04-02	IKST08-01	IKST10-02	IKST12-03
IKST06-01	IKST08-02	IKST10-03	IKST12-04
IKST06-02	IKST08-03	IKST10-04	

⊖IKST-G卡套螺纹侧三通-G螺纹



MODEL			
IKST04-G01	IKST06-G03	IKST08-G04	IKST12-G03
IKST04-G02	IKST08-G01	IKST10-G02	IKST12-G02
IKST06-G01	IKST08-G02	IKST10-G03	IKST12-G04
IKST06-G02	IKST08-G03	IKST10-G04	

⊖IKF卡套内螺纹直通



MODEL			
IKF04-01	IKF06-03	IKF08-04	IKF12-02
IKF04-02	IKF08-01	IKF10-02	IKF12-03
IKF06-01	IKF08-02	IKF10-03	IKF12-04
IKF06-02	IKF08-03	IKF10-04	

⊖IKF-G卡套内螺纹直通-G螺纹



MODEL			
IKF04-G01	IKF06-G03	IKF08-G04	IKF12-G02
IKF04-G02	IKF08-G01	IKF10-G02	IKF12-G03
IKF06-G01	IKF08-G02	IKF10-G03	IKF12-G04
IKF06-G02	IKF08-G03	IKF10-G04	

⊖IKLF卡套内螺纹弯头



MODEL			
IKLF04-01	IKLF08-01	IKLF10-02	IKLF12-03
IKLF06-01	IKLF08-02	IKLF10-03	IKLF12-04
IKLF06-02	IKLF08-03	IKLF10-04	
IKLF06-03	IKLF08-04	IKLF12-02	

⊖IKLF-G卡套内螺纹弯头-G螺纹



MODEL			
IKLF04-G01	IKLF06-G03	IKLF08-G04	IKLF12-G02
IKLF04-G02	IKLF08-G01	IKLF10-G02	IKLF12-G03
IKLF06-G01	IKLF08-G02	IKLF10-G03	IKLF12-G04
IKLF06-G02	IKLF08-G03	IKLF10-G04	

⊖IKV卡套弯头



MODEL			
IKV04	IKV08	IKV12	
IKV06	IKV10		

⊖IKU卡套直通



MODEL			
IKU04	IKU08	IKU12	
IKU06	IKU10		

⊖IKE卡套正三通



MODEL			
IKE04	IKE08	IKE12	
IKE06	IKE10		

⊖K螺母



MODEL			
K04-001	K08-001	K12-001	
K06-001	K10-001		

⊖K卡套



MODEL			
K04-002	K08-002	K12-002	
K06-002	K10-002		

⊖K内衬套



MODEL			
K0425-003	K0805-003	K1075-003	
K0604-003	K0806-003	K1209-003	

316L不锈钢双卡接头
316L Stainless Steel Fittings with Double Ferrule



主要应用于半导体行业、石油化工、国防军工
Mainly used in the semiconductor industry, petrochemical sector, and defense military industry

订购号 / Order

SKC 06 - 01

① 型号/MODEL

② 管径/ Tube Outer Diamete

	公制/Metric Size						英制/Inch Size			
代号/Code	03	04	06	08	10	12	1/8	1/4	3/8	1/2
气管外径/Tube Outer Diameter(mm)	Φ3	Φ4	Φ6	Φ8	Φ10	Φ12	Φ1/8	Φ1/4	Φ3/8	Φ1/2

③ 螺纹尺寸/Thread Size;

	英制锥管螺纹/Taper Pipe Thread				英制直管螺纹/G Thread				公制螺纹/Mertric Thread
代号/Code	01	02	03	04	G01	G02	G03	G04	M5
尺寸/Size	R1/8	R1/4	R3/8	R1/2	G1/8	G1/4	G3/8	G1/2	M5X0.8

	美制锥管螺纹/American Taper Pipe Thread			
代号/Code	N01	N02	N03	N04
尺寸/Size	NPT1/8	NPT1/4	NPT3/8	NPT1/2

特点 / Features

- 采用316L不锈钢材质制造，具有卓越的强度和耐腐蚀性，能够在恶劣环境下长时间稳定使用
- 双卡结构的设计，具有出色的密封性能
- 能够有效吸收管道系统的振动能量，降低振动对系统设备的影响，提高系统的稳定性和可靠性
- 广泛应用于石油化工、化学工程、食品饮料、仪表、电力、船舶、半导体等行业的管道系统中

- Made of 316L stainless steel material, it has excellent strength and corrosion resistance, and can be used stably for a long time in harsh environments
- The design of the double ferrule structure has excellent sealing performance
- It can effectively absorb the vibration energy of the pipeline system, reduce the impact of vibration on system equipment, and improve the stability and reliability of the system
- Widely used in industries for pipeline systems,such as petrochemicals、chemical engineering、food and beverage、instrumentation、power、shipbuilding、and semiconductors

结构图 / Structure Chart

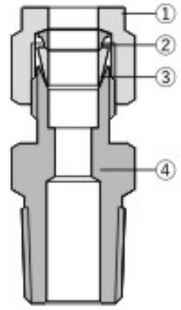

技术参数 / Specifications

使用流体/Fluid	空气，水，油/Air,Water,Oil
使用压力范围/Operating Pressure	0~20MPa
使用温度范围/Operating Temperature	<230℃
适用管/Applicable Pipe	专用钢管/Special steel pipe

注：管材应符合美国试验与材料协会标准A213规范或A269规范
Note: The pipes should comply with the American Society for Testing and Materials A213 specification or A269 specification

序号	名称	材质
1	螺母/Cap Nut	SUS316L
2	后卡套/Ferrule	SUS316L
3	前卡套/Front Ferrule	SUS316L
4	接头体/Metal Body	SUS316L

安装说明 / Installation Instructions

当用手旋转感到已经拧紧时，从该位置用扳手把卡套螺母旋转1¼圈
When feeling tightened by hand rotation, use a wrench to rotate the clamp nut 1¼ turns from that position

SKC卡套螺纹直通



MODEL			
SKC03-01 (N01)	SKC08-02 (N02)	SKC12-03 (N03)	SKC1/4-04 (N04)
SKC03-02 (N02)	SKC08-03 (N03)	SKC12-04 (N04)	SKC3/8-01 (N01)
SKC04-01 (N01)	SKC08-04 (N04)	SKC1/8-01 (N01)	SKC3/8-02 (N02)
SKC04-02 (N02)	SKC10-01 (N01)	SKC1/8-02 (N02)	SKC3/8-03 (N03)
SKC06-01 (N01)	SKC10-02 (N02)	SKC1/8-03 (N03)	SKC3/8-04 (N04)
SKC06-02 (N02)	SKC10-03 (N03)	SKC1/8-04 (N04)	SKC1/2-01 (N01)
SKC06-03 (N03)	SKC10-04 (N04)	SKC1/4-01 (N01)	SKC1/2-02 (N02)
SKC06-04 (N04)	SKC12-01 (N01)	SKC1/4-02 (N02)	SKC1/2-03 (N03)
SKC08-01 (N01)	SKC12-02 (N02)	SKC1/4-03 (N03)	SKC1/2-04 (N04)

SKC-G卡套螺纹直通-G螺纹

不带密封圈或密封垫
Without Seal ring or Gasket



MODEL			
SKC1/8-G01	SKC3/8-G03	SKC06-G01	SKC10-G01
SKC1/8-G02	SKC3/8-G04	SKC06-G02	SKC10-G02
SKC1/4-G01	SKC1/2-G01	SKC06-G03	SKC10-G03
SKC1/4-G02	SKC1/2-G02	SKC06-G04	SKC10-G04
SKC1/4-G03	SKC1/2-G03	SKC08-G01	SKC12-G01
SKC1/4-G04	SKC1/2-G04	SKC08-G02	SKC12-G02
SKC3/8-G01	SKC03-G01	SKC08-G03	SKC12-G03
SKC3/8-G02	SKC03-G02	SKC08-G04	SKC12-G04

⊖SKCF卡套内螺纹直通



MODEL			
SKCF04-01(N01)	SKCF08-03(N03)	SKCF12-03(N03)	SKCF3/8-N01
SKCF04-02(N02)	SKCF08-04(N04)	SKCF12-04(N04)	SKCF3/8-N02
SKCF06-01(N01)	SKCF10-01(N01)	SKCF1/8-N01	SKCF3/8-N03
SKCF06-02(N02)	SKCF10-02(N02)	SKCF1/8-N02	SKCF3/8-N04
SKCF06-03(N03)	SKCF10-03(N03)	SKCF1/4-N01	SKCF1/2-N01
SKCF06-04(N04)	SKCF10-04(N04)	SKCF1/4-N02	SKCF1/2-N02
SKCF08-01(N01)	SKCF12-01(N01)	SKCF1/4-N03	SKCF1/2-N03
SKCF08-02(N02)	SKCF12-02(N02)	SKCF1/4-N04	SKCF1/2-N04

⊖SKCF-G卡套内螺纹直通-G螺纹



MODEL			
SKCF03-G01	SKCF10-G02	SKCF1/4-G02	SKCF1/2-G03
SKCF06-G02	SKCF10-G03	SKCF1/4-G03	SKCF1/2-G04
SKCF06-G03	SKCF10-G04	SKCF1/4-G04	
SKCF06-G04	SKCF12-G02	SKCF3/8-G02	
SKCF08-G02	SKCF12-G03	SKCF3/8-G03	
SKCF08-G03	SKCF12-G04	SKCF3/8-G04	
SKCF08-G04	SKCF1/4-G01	SKCF1/2-G02	

⊖SKL卡套螺纹弯头



MODEL			
SKL03-01(N01)	SKL08-02(N02)	SKL12-03(N03)	SKL3/8-N02
SKL03-02(N02)	SKL08-03(N03)	SKL12-04(N04)	SKL3/8-N03
SKL04-01(N01)	SKL08-04(N04)	SKL1/8-N01	SKL3/8-N04
SKL04-02(N02)	SKL10-01(N01)	SKL1/8-N02	SKL1/2-N01
SKL06-01(N01)	SKL10-02(N02)	SKL1/4-N01	SKL1/2-N02
SKL06-03(N03)	SKL10-04(N04)	SKL1/4-N03	SKL1/2-N04
SKL06-04(N04)	SKL12-01(N01)	SKL1/4-N04	
SKL08-01(N01)	SKL12-02(N02)	SKL3/8-N01	

⊖SKLF卡套内螺纹弯头



MODEL			
SKLF06-01(N01)	SKLF08-04(N04)	SKLF12-03(N03)	SKLF3/8-N02
SKLF06-02(N02)	SKLF10-01(N01)	SKLF12-04(N04)	SKLF3/8-N03
SKLF06-03(N03)	SKLF10-02(N02)	SKLF1/4-N01	SKLF3/8-N04
SKLF06-04(N04)	SKLF10-03(N03)	SKLF1/4-N02	SKLF1/2-N01
SKLF08-01(N01)	SKLF10-04(N04)	SKLF1/4-N03	SKLF1/2-N02
SKLF08-03(N03)	SKLF12-02(N02)	SKLF3/8-N01	SKLF1/2-N04

⊖SKB卡套螺纹正三通



MODEL			
SKB06-02(N02)	SKB10-02(N02)	SKB12-04(N04)	SKB3/8-N03
SKB06-03(N03)	SKB10-03(N03)	SKB1/4-N02	SKB1/2-N02
SKB08-02(N02)	SKB12-02(N02)	SKB1/4-N03	SKB1/2-N03
SKB08-03(N03)	SKB12-03(N03)	SKB3/8-N02	SKB1/2-N04

⊖SKD卡套螺纹侧三通



MODEL			
SKD06-02(N02)	SKD10-02(N02)	SKD12-04(N04)	SKD3/8-N03
SKD06-03(N03)	SKD10-03(N03)	SKD1/4-N02	SKD1/2-N02
SKD08-02(N02)	SKD12-02(N02)	SKD1/4-N03	SKD1/2-N03
SKD08-03(N03)	SKD12-03(N03)	SKD3/8-N02	SKD1/2-N04

⊖SKBF卡套内螺纹正三通



MODEL			
SKBF06-02	SKBF08-N02	SKBF12-02	SKBF3/8-N02
SKBF06-N02	SKBF10-02	SKBF12-N02	SKBF1/2-N02
SKBF08-02	SKBF10-N02	SKBF1/4-N02	

⊖SKGJ卡套插入型直通



MODEL			
SKGJ1/8-1/4	SKGJ1/4	SKGJ3/8-1/4	SKGJ1/2-1/4
SKGJ1/8-3/8	SKGJ1/4-3/8	SKGJ3/8	SKGJ1/2-3/8
SKGJ1/8-1/2	SKGJ1/4-1/2	SKGJ3/8-1/2	SKGJ1/2

⊖SKCJF卡套插入型内螺纹直通



MODEL			
SKCJF1/4-01(N01)	SKCJF1/4-04(N04)	SKCJF3/8-03(N03)	SKCJF1/2-03(N03)
SKCJF1/4-02(N02)	SKCJF3/8-01(N01)	SKCJF3/8-04(N04)	SKCJF1/2-04(N04)
SKCJF1/4-03(N03)	SKCJF3/8-02(N02)	SKCJF1/2-02(N02)	

⊖SKCJ卡套插入型螺纹直通



MODEL			
SKCJ1/4-N01	SKCJ1/4-N04	SKCJ3/8-N03	SKCJ1/2-N03
SKCJ1/4-N02	SKCJ3/8-N01	SKCJ3/8-N04	SKCJ1/2-N04
SKCJ1/4-N03	SKCJ3/8-N02	SKCJ1/2-N02	

⊖SKU卡套直通



MODEL			
SKU03	SKU10	SKU08-06	SKU12-08
SKU04	SKU12	SKU10-06	SKU12-10
SKU06	SKU06-03	SKU12-06	
SKU08	SKU06-04	SKU10-08	

⊖SKU卡套直通



MODEL			
SKU1/8	SKU1/4-1/8	SKU3/4-1/2	SKU10-1/4
SKU1/4	SKU3/8-1/4	SKU1-1/2	SKU10-3/8
SKU3/8	SKU1/2-1/4	SKU1/4-06	SKU12-3/8
SKU1/2	SKU1/2-3/8	SKU08-1/4	SKU1/2-12

⊖SKE卡套正三通



MODEL			
SKE03	SKE10	SKE1/2	SKE3/4-1/2-3/4
SKE04	SKE12	SKE1/4	SKE3/8-1/4-3/8
SKE06		SKE1/8	SKE1/2-1/4-1/2
SKE08		SKE3/8	

⊖SKPF卡套用管帽



MODEL			
SKPF03	SKPF10	SKPF1/2	
SKPF04	SKPF12	SKPF1/4	
SKPF06		SKPF1/8	
SKPF08		SKPF3/8	

⊖SKZ卡套四通



MODEL			
SKZ06	SKZ08	SKZ10	SKZ12
SKZ1/2	SKZ1/4	SKZ1/8	SKZ3/8

⊖SKM卡套隔板直通



MODEL			
SKM06	SKM08	SKM10	SKM12
SKM1/2	SKM1/4	SKM1/8	SKM3/8

⊖SKMF卡套隔板内螺纹



MODEL			
SKMF06-02	SKMF08-02		
SKMF06-N02	SKMF08-N02		

⊖SKPP卡套用堵头



MODEL			
SKPP03	SKPP10	SKPP1/2	
SKPP04	SKPP12	SKPP1/4	
SKPP06		SKPP1/8	
SKPP08		SKPP3/8	

SK-001卡套螺帽



MODEL			
SK03-001	SK10-001	SK1/2-001	
SK04-001	SK12-001	SK1/4-001	
SK06-001		SK1/8-001	
SK08-001		SK3/8-001	

SK-002前卡套



MODEL			
SK03-002	SK10-002	SK1/2-002	
SK04-002	SK12-002	SK1/4-002	
SK06-002		SK1/8-002	
SK08-002		SK3/8-002	

SK-003后卡套



MODEL			
SK03-003	SK10-003	SK1/2-003	
SK04-003	SK12-003	SK1/4-003	
SK06-003		SK1/8-003	
SK08-003		SK3/8-003	

卡套接头阀类
Ferrule Valve Fittings

订购号 / Order

SBV U - D 06 □ - □

⑤ 手柄/Handle
空白：黑色铝制手柄
Blank：Black Aluminum Handle

⑤ 密封材质/Seal Material
空白/Blank：PTFE

④ 端口尺寸/Port size

D:卡套连接型/Compression Type					
代码/Code	04	06	08	10	12
管外径/Outer diameter	4mm	6mm	8mm	10mm	12mm

螺纹型/Thread type								
代码/Code	01	02	03	04	N01	N02	N03	N04
锥管螺纹/Taper Pipe Thread	R1/8	R1/4	R3/8	R1/2	NPT1/8	NPT1/4	NPT3/8	NPT1/2

③ 端口类型/Port type

D	M	F
卡套连接型 Compression Type	外螺纹型 Male Type	内螺纹型 Female type

② 球阀类型/Ball Valve Type

U	L	3W
直通型 Straight Type	直角型 Right Angle Type	三通型 Three-Way Type

① 型号/Model

订购号 / Order

SNV - D 06

③ 端口尺寸/Port size

D:卡套连接型/Compression Type					
代码/Code	04	06	08	10	12
管外径/Outer diameter	4mm	6mm	8mm	10mm	12mm

螺纹型/Thread type				
代码/Code	01	02	03	04
锥管螺纹/Taper Pipe Thread	R1/8	R1/4	R3/8	R1/2

② 端口类型/Port type

D	M	F
卡套连接型 Compression Type	外螺纹型 Male Type	内螺纹型 Female type

① 型号/Model

订购号 / Order

SKVU - D 06

① 型号/Model

② 端口类型/Port type

D
卡套连接型 Compression Type

③ 端口尺寸/Port size

D:卡套连接型/Compression Type				
代码/Code	06	08	10	12
管外径/Outer diameter	6mm	8mm	10mm	12mm

SBV不锈钢仪表高压球阀
SBV Stainless Steel High Pressure Instrument Ball Valve



SNV不锈钢针阀系列
SNV Stainless Steel Needle Valve Series



SKVU不锈钢卡套单向阀系列
SKVU Stainless Steel Compression Check Valve Series





订购号 / Order

BD - G01 02 - SC

① 型号/MODEL

② 螺纹尺寸/Thread Size

	英制锥管螺纹/Taper Pipe Thread						英制直管螺纹/G Thread						公制螺纹/Mertric Thread
代号/Code	01	02	03	04	06	10	G01	G02	G03	G04	G06	G10	M5
尺寸/Size	R1/8	R1/4	R3/8	R1/2	R3/4	R1	G1/8	G1/4	G3/8	G1/2	G3/4	G1	M5X0.8

IBD和CLFM为内外牙产品，表示内牙螺纹/IBD and CLFM are female and male teeth products, representing female threads.

③ 螺纹尺寸/Thread Size

螺纹和②相同时省略：例CEF-G01/Elimination of the same threads : Example CEF-G01
IBD和CLFM此处表示外牙螺纹/IBD and CLFM are representing male threads

④ 材质/ Material

代号/Code	SC	空白/Blank
材质/Material	SUS304	全铜/Brass

BP-SC内六角堵头



MODEL			
BP-01-SC	BP-02-SC	BP-03-SC	BP-04-SC
BP-06-SC	BP-10-SC		

BP-G-SC内六角堵头-G螺纹



MODEL			
BP-M5-SC	BP-G01-SC	BP-G02-SC	BP-G03-SC
BP-G04-SC	BP-G06-SC	BP-G10-SC	

⊖BZ-SC外六角堵头



MODEL			
BZ-01-SC	BZ-02-SC	BZ-03-SC	BZ-04-SC
BZ-06-SC	BZ-10-SC		

⊖BZ-G-SC外六角堵头-G螺纹



MODEL			
BZ-M5-SC	BZ-G01-SC	BZ-G02-SC	BZ-G03-SC
BZ-G04-SC			

⊖BB-SC外牙直通



MODEL			
BB-01-SC	BB-02-SC	BB-03-SC	BB-04-SC
BB-06-SC	BB-10-SC		

⊖BA-G-SC内牙直通



MODEL			
BA-G01-SC	BA-G02-SC	BA-G03-SC	BA-G04-SC
BA-G06-SC	BA-G10-SC		

⊖CLF-G-SC内牙弯头



MODEL			
CLF-G01-SC	CLF-G02-SC	CLF-G03-SC	CLF-G04-SC
CLF-G06-SC	CLF-G10-SC		

⊖CL-SC外牙弯头



MODEL			
CL-01-SC	CL-02-SC	CL-03-SC	CL-04-SC
CL-06-SC	CL-10-SC		

⊖BD-G-SC内外牙直通



MODEL			
BD-G0101-SC	BD-G0202-SC	BD-G0303-SC	BD-G0406-SC
BD-G0102-SC	BD-G0203-SC	BD-G0304-SC	BD-G0410-SC
BD-G0103-SC	BD-G0204-SC	BD-G0306-SC	BD-G0610-SC

⊖CEF-G-SC内牙三通



MODEL			
CEF-G01-SC	CEF-G02-SC	CEF-G03-SC	CEF-G04-SC
CEF-G06-SC	CEF-G10-SC		

⊖IBZ外六角堵头

TF：涂氟/With Coating



MODEL			
IBZ-01	IBZ-02	IBZ-03	IBZ-04
IBZ-01-TF	IBZ-02-TF	IBZ-03-TF	IBZ-04-TF

⊖IBZ-G外六角堵头



MODEL			
IBZ-M5	IBZ-G02	IBZ-G04	
IBZ-G01	IBZ-G03		

⊖IBP内六角堵头

TF：涂氟/With Coating



MODEL			
IBP-01	IBP-02	IBP-03	IBP-04
IBP-01-TF	IBP-02-TF	IBP-03-TF	IBP-04-TF

⊖IBP-G内六角堵头-G螺纹



MODEL			
IBP-M5	IBP-G02	IBP-G04	
IBP-G01	IBP-G03		

⊖IBD内外螺纹直通



MODEL			
IBD-M501	IBD-G0104	IBD-G0204	IBD-G0403
IBD-G0101	IBD-G0201	IBD-G0302	IBD-G0404
IBD-G0102	IBD-G0202	IBD-G0303	IBD-G0406
IBD-G0103	IBD-G0203	IBD-G0304	

⊖IBD-G内外螺纹直通



MODEL			
IBD-M5G01	IBD-G01G04	IBD-G02G06	IBD-G04G06
IBD-G01G02	IBD-G02G03	IBD-G03G04	
IBD-G01G03	IBD-G02G04	IBD-G03G06	

⊖IBB双外螺纹直通



MODEL			
IBB-01	IBB-04	IBB-0203	IBB-0204
IBB-02	IBB-0102	IBB-0104	
IBB-03	IBB-0103	IBB-0304	

⊖IBB-G双外螺纹直通



MODEL			
IBB-M5	IBB-G03	IBB-G01G03	IBB-G03G04
IBB-G01	IBB-G04	IBB-G02G03	
IBB-G02	IBB-G01G02	IBB-G02G04	

⊖CEF内螺纹三通



MODEL			
CEF-G01	CEF-G02	CEF-G03	CEF-G04

⊖CET外螺纹三通



MODEL			
CET-01	CET-02	CET-03	CET-04

⊖CLFM内外螺纹直角



MODEL			
CLFM-G0101	CLFM-G0202	CLFM-G0303	CLFM-G0404

⊖CLF双内螺纹直角



MODEL			
CLF-G01	CLF-G02	CLF-G03	CLF-G04

⊖IBA内螺纹直通



MODEL			
IBA-G01	IBA-G04	IBA-G02G03	IBA-G03G04
IBA-G02	IBA-G01G03	IBA-G02G04	
IBA-G03	IBA-G01G04	IBA-G01G02	

⊖CL双外螺纹直角



MODEL			
CL-01	CL-04	CL-0203	
CL-02	CL-0102	CL-0204	
CL-03	CL-0103	CL-0304	

⊖EBB双螺纹硬密封接头

New



MODEL			
EBB-0101	EBB-0202	EBB-0303	
EBB-0102	EBB-0203	EBB-0304	
EBB-0103	EBB-0204	EBB-0404	



订购号 / Order

LCN　06　-　01　-　SC

④ 材质/ Material

空白/Blank	SC	SS
黄铜/Brass	不锈钢/SUS304	不锈钢/SUS316

③ 螺纹代号/Series Code

代号/Code	01	02	03	04	06	10
尺寸/Size	R1/8	R1/4	R3/8	R1/2	R3/4	R1

② 接管内径/Joint Pipe Inside Diameter

代号/Code	06	09	12	15	19	25
气管内径/Tube I.D	Φ6	Φ9	Φ12	Φ15	Φ19	Φ25

① 规格代码/Specification Code

LCN：一体型/Mono type	LCJN：分体型/Split type

结构图 / Structure Chart

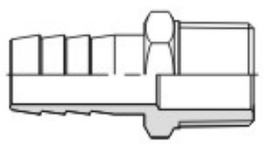

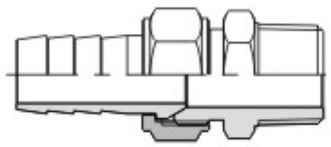

⊖LCN



MODEL			
LCN06-01	LCN09-02	LCN12-04	LCN19-06
LCN06-02	LCN09-03	LCN15-03	LCN25-06
LCN06-03	LCN09-04	LCN15-04	LCN25-10
LCN06-04	LCN12-02	LCN15-06	
LCN09-01	LCN12-03	LCN19-04	

⊖LCJN



MODEL			
LCJN06-01	LCJN09-03	LCJN12-06	LCJN19-06
LCJN06-02	LCJN09-04	LCJN15-03	
LCJN06-03	LCJN12-03	LCJN15-04	
LCJN09-02	LCJN12-04	LCJN19-04	

⊖LCN-SC(SS)



MODEL		
LCN06-01-SC(SS)	LCN09-03-SC(SS)	LCN15-04-SC(SS)
LCN06-02-SC(SS)	LCN09-04-SC(SS)	LCN15-06-SC(SS)
LCN06-03-SC(SS)	LCN12-02-SC(SS)	LCN19-04-SC(SS)
LCN06-04-SC(SS)	LCN12-03-SC(SS)	LCN19-06-SC(SS)
LCN09-01-SC(SS)	LCN12-04-SC(SS)	LCN25-10-SC(SS)
LCN09-02-SC(SS)	LCN15-03-SC(SS)	

⊖LCJN-SC(SS)



MODEL		
LCJN09-03-SC(SS)	LCJN12-04-SC(SS)	LCN25-06-SC(SS)
LCJN19-06-SC(SS)		

超小型不锈钢倒钩接头
Micro Stainless Steel Barbed Fittings

⊖LC-SC超小型不锈钢倒钩接头



MODEL			
LC0425-M5-SC	LC0640-M5-SC		

⊖LH-SC超小型不锈钢倒钩接头



MODEL			
LH0425-M5-SC	LH0640-M5-SC		



订购号 / Order

CT 04 - T

③ 非标代号/Code of non standard

② 管径/ Tube Outer Diameter

	公制/Metric Size				
代号/Code	04	06	08	10	12
气管外径/Tube Outer Diameter(mm)	Φ4	Φ6	Φ8	Φ10	Φ12

① 型号/MODEL

CT:直立型 / Straight	CL:L型 / Elbow

作用 / Applications

- 应用于阀或真空类产品非螺纹连接的快插式接头，一般用钢丝插销或卡板连接
- Quick Connecting tube fittings for non-threaded connections of valves or vacuum products are generally connected by steel wire bolts or chucks

结构图 / Structure Chart

编号	名称	材质
1	按钮(Sleeve)	聚甲醛(POM)
2	锌套(Collar)	锌合金(ZINC)
3	簧片(Lock Claws)	不锈钢(SUS)
4	压环(Back Ring)	聚甲醛(POM)
5	密封圈(Packing)	丁腈橡胶(NBR)
6	铜体(Metal Body)	镀镍铜(Brass)
7	O型圈(O-Ring)	丁腈橡胶(NBR)

特点 / Features

- 产品更加紧凑合理，减小产品空间
- 产品安装更快捷方便
- 有直通和弯头类各种规格可选，安装部位尺寸可根据客户要求定制
- 铜体表面镀镍，可有效防止腐蚀和污染
- More compact and reasonable products, reduce product space
- Faster and Convenient Installation of Products
- There are various specifications of straight and elbow, and the dimensions of installation parts can be customized according to customer requirements
- Nickel plating on brass body can effectively prevent corrosion and pollution

技术参数 / Specifications

使用流体/Fluid	空气，真空/Air,Vacuum
使用压力范围/Operating Pressure	0~1.0MPa(150psi)
负压/Negative Pressure	-750mmHg(750Torr)
耐压/Max Pressure	1.5MPa
使用环境及流体温度/Operating Temperature	0~60℃(32~140°F)
适用软管/Applicable Tube	PU及尼龙管/Polyurethane and Nylon

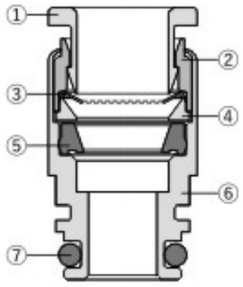



订购号 / Order

IPC 06 - 01 - 0.5

④小孔孔径/Small-hole Diameter
0.3~1.0可定制

③ 螺纹尺寸/Thread Size

	英制锥管螺纹/Taper Pipe Thread	公制螺纹/Mertric Thread
代号/Code	01	M5
尺寸/Size	R1/8	M5X0.8

② 管径/ Tube Outer Diameter

	公制/Metric Size	
代号/Code	04	06
气管外径/Tube Outer Diameter(mm)	Φ4	Φ6

① 型号/MODEL

IPC：直立型 / Straight	IPL：L型 / Elbow

特点 / Features

- 用快插式接头连接方式,便于管路连接
- 按要求定制小孔,保持流量更稳定
- The joint tube mode,Easy pipeline connection
- Customization as required to keep flow more stable

作用 / Applications

- 应用于限制气路流量的场合；一般纺织行业中广泛应用
- It is applied to the occasion of restricting air flow; Widely used in textile industry

产品图示说明 / Product Graphic Description

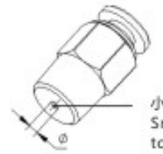

小孔可按客户要求定制
Small holes can be customized according to customer requirements



订购号 / Order

PC 06 - M5 C - □

① 型号/MODEL

② 管径/ Tube Outer Diameter

	公制/Metric Size		
代号/Code	03	04	06
气管外径/Tube Outer Diameter(mm)	Φ3	Φ4	Φ6

③ 螺纹尺寸/Thread Size;

	英制锥管螺纹/Taper Pipe Thread		英制直管螺纹/G Thread		公制螺纹/Mertric Thread				
代号/Code	01	02	G01	G02	M3	M4	M5	M6	M7
尺寸/Size	R1/8	R1/4	G1/8	G1/4	M3X0.5	M4X0.7	M5X0.8	M6X1	M7X1

④ 超小型代号/Compact Code

⑤ 塑料体帽颜色/Color

特点 / Features

- 超小型快速装配接头用于气动管类系统
- 这种快速装配接头比标准型管接头小40%
- 椭圆型的超小释放环简化了插入和拉出管子的操作
- The compact fittings used to the pneumatic tube system
- The volume is 40% smaller than the standard pneumatic fittings
- The small and oval sleeve is easy to push in and pull out the tube

结构图 / Structure Chart

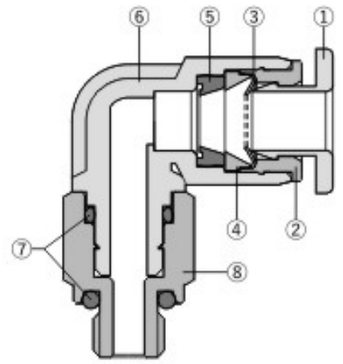

技术参数 / Specifications

使用流体/Fluid	空气（无其他的气体和液体） Air(no other gases or liquids)
使用压力范围/Operating Pressure	0~1.0MPa(150psi)
负压/Negative Pressure	-100Kpa(-29.5 in-Hg)
使用温度范畴/Operating Temperature	-20~70℃(-4~158°F)
适用软管/Applicable Tube	PU及尼龙管/Polyurethane and Nylon

序号	名称	材质
1	按钮(Sleeve)	聚甲醛(POM)
2	钢套(Collar)	镀镍铜(Brass)
3	簧片(Lock Claws)	不锈钢(SUS)
4	压环(Back Ring)	黄铜(Brass)
5	密封圈(Packing)	丁腈橡胶(NBR)
6	塑料体(Resin Body)	聚对苯二甲酸丁二醇脂(PBT)
7	O型圈(O-Ring)	丁腈橡胶(NBR)
8	铜体(Metal Body)	镀镍铜(Brass)

⊖PC-C螺纹直通迷你型



MODEL			
PC03-M3C	PC04-M3C	PC04-G02C	PC06-G01C
PC03-M5C	PC04-M5C	PC06-M3C	PC06-G02C
PC03-M6C	PC04-M6C	PC06-M5C	
PC03-01C	PC04-01C	PC06-M6C	
PC03-G01C	PC04-G01C	PC06-01C	

⊖POC-C圆螺纹直通迷你型



MODEL			
POC02-M3C	POC03-G01C	POC04-01C	POC06-M6C
POC03-M3C	POC04-M3C	POC04-G01C	POC06-M7C
POC02-M5C	POC04-M5C	POC04-G02C	POC06-01C
POC03-M5C	POC04-M6C	POC06-M3C	POC06-G01C
POC03-M6C	POC04-M7C	POC06-M5C	POC06-G02C

⊖PL-C L型螺纹弯头迷你型



MODEL			
PL03-M3C	PL04-M3C	PL04-G02C	PL06-G01C
PL03-M5C	PL04-M5C	PL06-M3C	PL06-G02C
PL03-M6C	PL04-M6C	PL06-M5C	
PL03-01C	PL04-01C	PL06-M6C	
PL03-G01C	PL04-G01C	PL06-01C	

⊖PLL-C加长L型螺纹弯头迷你型



MODEL			
PLL03-M3C	PLL04-M3C	PLL04-G02C	PLL06-G02C
PLL03-M5C	PLL04-M5C	PLL06-M5C	
PLL03-M6C	PLL04-M6C	PLL06-M6C	
PLL03-01C	PLL04-01C	PLL06-01C	
PLL03-G01C	PLL04-G01C	PLL06-G01C	

⊖PB-C螺纹正三通迷你型



MODEL			
PB03-M3C	PB03-G01C	PB04-01C	PB06-M6C
PB03-M5C	PB04-M3C	PB04-G01C	PB06-01C
PB03-M6C	PB04-M5C	PB04-G02C	PB06-G01C
PB03-01C	PB04-M6C	PB06-M5C	PB06-G02C

⊖PD-C螺纹侧三通迷你型



MODEL			
PD03-M3C	PD03-G01C	PD04-01C	PD06-M6C
PD03-M5C	PD04-M3C	PD04-G01C	PD06-01C
PD03-M6C	PD04-M5C	PD04-G02C	PD06-G01C
PD03-01C	PD04-M6C	PD06-M5C	PD06-G02C

⊖PE-C塑料正三通迷你型



MODEL			
PE03C	PE04C	PE06C	

⊖PU-C塑料直通迷你型



MODEL			
PU03C	PU04C	PU06C	PU04-03C

⊖PV-C塑料弯头迷你型

MODEL			
PV03C	PV04C	PV06C	

⊖PY-C塑料Y三通迷你型

MODEL			
PY03C	PY04C	PY06C	PY06-04C



主要应用于纺织机械、3C行业
Mainly used in Textile Machinery and 3C Industry

订购号 / Order

LC　0425　-　M5

③ 螺纹尺寸/Thread Size:

	公制螺纹/Mertric Thread	
代号/Code	M3	M5
尺寸/Size	M3X0.5	M5X0.8

② 管径/ Tube O.D&I.D

代号/Code	外径/O.D	内径/I.D
0425	Φ4	Φ2.5

① 型号/MODEL

⊖LC倒勾型直通接头



MODEL	
LC0320-M3	LC0425-M5
LC0320-M5	LC0640-M5
LC0425-M3	

⊖LT迷你倒钩系列



MODEL	
LT0320-M3	LT0425-M5
LT0320-M5	LT0640-M5
LT0425-M3	

⊖LH倒勾型通用弯头



MODEL	
LH0320-M3	LH0425-M5
LH0320-M5	LH0640-M5
LH0425-M3	

冷却系统用接头
Special fittings for cooling system

特点 / Features

- 采用双密封结构设计，保证产品无泄漏
- 密封圈材质耐水，提高产品使用寿命
- 产品符合ROHS2.0环保标准
- 一般应用于冷却系统管路连接

- Adopting a double sealing structure design, ensuring no leaks for the products
- The sealing ring material is water resistant, improving the product's service life
- The product meets ROHS2.0 environmental standards
- Generally used for cooling system pipeline connections

结构图 / Structure Chart

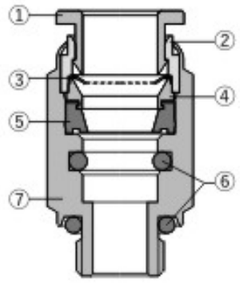

序号	名称	材质
1	按钮(Sleeve)	聚甲醛(POM)
2	锌套(Collar)	锌合金(ZINC)
3	簧片(Lock Claws)	不锈钢(SUS)
4	压环(Back Ring)	聚甲醛(POM)
5	密封圈(Packing)	三元乙丙(EPDM)
6	O型圈(O-Ring)	三元乙丙(EPDM)
7	铜体(Metal Body)	镀镍铜(Brass)

⊖双密封螺纹直通 Double seal thread straight



MODEL			
IPC08-G01-T	IPC10-G02-T		

特点 / Features

- 接头无需加工螺纹，直接压入安装孔
- 鱼线密封、润滑和保护
- 埋入式接头安装过程中与安装孔自动对齐
- 生产到安装过程中，可有效防止产品污染

- The fitting does not require threading and can be directly pressed into the installation hole
- Fishing line sealing, lubrication, and protection
- The embedded fitting automatically aligns with the installation hole during the installation process
- During the production to installation process, it can effectively prevent product contamination

技术参数 / Specifications

使用流体/Fluid	空气，真空/Air，Vacuum
使用压力范围/Operating Pressure	0~1.6MPa
耐压/Negative Pressure	2.15MPa
使用环境及流体温度/Operating Temperature	-40~85℃
适用软管/Applicable Tube	PU及尼龙管/Polyurethane and Nylon

结构图 / Structure Chart

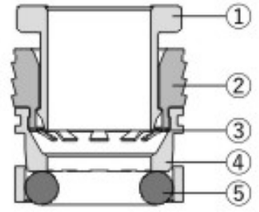

序号	名称	材质
1	按钮(Sleeve)	塑料(PA66)
2	铜套(Collar)	铜(C3604E)
3	簧片(Lock Claws)	不锈钢(SUS301)
4	压环(Back Ring)	塑料(PA66)
5	O型圈(O Ring)	丁精橡胶(NBR)

⊖IXCA

New



MODEL			
IXCA06			

主要应用于汽车行业
Mainly used in the Automotive Industry



订购号 / Order

BSL - G01 - □

① 型号/Model

② 螺纹尺寸/Thread Size

	英制锥管螺纹/Taper Pipe Thread				英制直管螺纹/G Thread							公制螺纹/Mertric Thread
代号/Code	01	02	03	04	G01	G02	G03	G04	G06	G10	G12	M5
尺寸/Size	R1/8	R1/4	R3/8	R1/2	G1/8	G1/4	G3/8	G1/2	G3/4	G1	G1 1/4	M5X0.8

③ 金属不锈钢/Stainless Steel

代号/Code	空白/Blank	SC
材质/Material	铜/Brass	SUS304

塑料(PSU和PSL)/Plastic(PSU and PSL)

代号/Code	空白/Blank	A	BK	OR
颜色/Color	蓝色/Blue	灰色/Gray	黑色/Black	橙色/Orange

⊖BSL-G长头消声器



MODEL			
BSL-M5	BSL-G03	BSL-G10	
BSL-G01	BSL-G04	BSL-G12	
BSL-G02	BSL-G06	BSL-G14	

⊖ISD-G调速消声器



Speed Regulation

MODEL			
ISD-G01	ISD-G03	ISD-G06	
ISD-G02	ISD-G04	ISD-G10	

⊖BESL-G B型排气节流消声器



Speed Control and Exhaust

MODEL			
BESL-G01	BESL-G02	BESL-G03	BESL-G04

⊖BSLM-G平头消声器



MODEL			
BSLM-M5	BSLM-G02	BSLM-G04	BSLM-G10
BSLM-G01	BSLM-G03	BSLM-G06	

⊖SDV-G鸟巢消声器



MODEL			
SDV-G01	SDV-G03	SDV-G06	
SDV-G02	SDV-G04	SDV-G10	

⊖BSL-SC长头消声器



MODEL			
BSL-M5-SC	BSL-01-SC	BSL-03-SC	BSL-06-SC
BSL-M7-SC	BSL-02-SC	BSL-04-SC	BSL-10-SC

⊖BSLM-SC平头消声器



MODEL			
BSLM-M5-SC	BSLM-02-SC	BSLM-04-SC	BSLM-10-SC
BSLM-01-SC	BSLM-03-SC	BSLM-06-SC	

⊖PSE-G塑料消声器



MODEL			
PSE-G01	PSE-G03	PSE-G06	
PSE-G02	PSE-G04	PSE-G10	

⊖PSL-G塑料消声器



MODEL			
PSL-G01	PSL-G03	PSL-G06	
PSL-G02	PSL-G04	PSL-G10	

⊖PSU-G塑料消声器



MODEL			
PSU-M5	PSU-G02	PSU-G04	PSU-G10
PSU-G01	PSU-G03	PSU-G06	

⊖PSGJ插入型塑料消声器



MODEL			
PSGJ06	PSGJ08	PSGJ10	PSGJ12

⊖PSUA-G塑料消声器(消音效果佳)



MODEL			
PSUA-G01	PSUA-G02		



订购号 / Order

IPC 06 - 01 □ - □

⑤ 塑料体帽颜色/Color

代号	无	A	BK
颜色/Color			

④ 改进后产品代号/Iproved Product Code

代号/Code	空白/Blank	S
内容/ Contnt	标准产品/Standard Product	改进后新产品/New Product

③ 螺纹尺寸/Thread Size

	英制锥管螺纹/Taper Pipe Thread					英制直管螺纹/G Thread			
代号/Code	01	02	03	04	06	G01	G02	G03	G04
尺寸/Size	R1/8	R1/4	R3/8	R1/2	R3/4	G1/8	G1/4	G3/8	G1/2

	公制螺纹/Mertric Thread								美制锥管螺纹/American Taper Pipe Thread				
代号/Code	M5	M6	M8X1	M10X1	M12X1.5	M14X1.5	M16X1.5	M20X1.5	N01	N02	N03	N04	N06
尺寸/Size	M5X0.8	M6X1	M8X1	M10X1	M12X1.5	M14X1.5	M16X1.5	M20X1.5	NPT1/8	NPT1/4	NPT3/8	NPT1/2	NPT3/4

② 管径/Tube Outer Diameter

	公制/Metric Size													英制/Inch Size				
代号/Code	04	05	06	07	08	09	10	11	12	13	14	15	16	5/32	1/4	5/16	3/8	1/2
气管外径/Tube Outer Diameter(mm)	Φ4	Φ5	Φ6	Φ7	Φ8	Φ9	Φ10	Φ11	Φ12	Φ13	Φ14	Φ15	Φ16	Φ5/32	Φ1/4	Φ5/16	Φ3/8	Φ1/2

① 型号/MODEL

特点 / Features

- 快插式气动管接头用于气动管类系统
- 管接头具有各种各样的型号，可以满足你在气动管类系统中的所有需要
- 即使安装之后，管道的方向仍然可以自由改变
- 镀镍的铜体可以防腐蚀和污染
- 所有的R跟NPT螺纹胶都起密封作用
- 所有的直螺纹都用标准的O型圈

- One-Touch tube fittings are used in pneumatics piping
- The tube fittings come in a wide variety of models to meet all your needs in pneumatics piping
- Even after installation ,the direction of the tube can be changed freely
- Nickel-Plated metal body ensures Anti-Corrosion and Anti-Contarmination
- All R and NPT threads are Pre-Coated sealant
- All cylindrical threads are standard with O-Ring seals

结构图 / Structure Chart

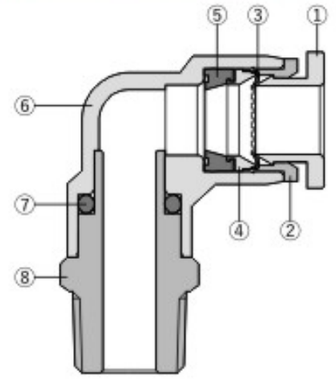

技术参数 / Specifications

使用流体/Fluid	空气，真空/Air,Vacuum
使用压力范围/Operating Pressure	0~1.0MPa(150psi)
负压/Negative Pressure	-100Kpa(-29.5 in·Hg)
耐压/Max Pressure	1.5MPa
使用环境及流体温度/Operating Temperature	-20~70℃(-4~158°F)
适用软管/Applicable Tube	PU及尼龙管/Polyurethane and Nylon

序号	名称	材质
1	按钮(Sleeve)	聚甲醛(POM)
2	锌套/铝套(Collar)	锌合金(ZINC)/铝(6061)
3	簧片(Lock Claws)	不锈钢(SUS)
4	压环(Back Ring)	聚甲醛(POM)
5	密封圈(Packing)	丁腈橡胶(NBR)
6	塑料体(Resin Body)	聚对苯二甲酸丁二醇脂(PBT)
7	O型圈(O-Ring)	丁腈橡胶(NBR)
8	体(Body)	镀镍铜(Brass)/铝(6061)

⊖IPC螺纹直通/Male Straight



MODEL				
IPC04-M5	IPC06-02	IPC08-04	IPC12-02	IPC16-02
IPC04-M6	IPC06-03	IPC08-06	IPC12-03	IPC16-03
IPC04-01	IPC06-04	IPC10-01	IPC12-04	IPC16-04
IPC04-02	IPC08-M5	IPC10-02	IPC12-06	IPC16-06
IPC04-03	IPC08-M6	IPC10-03	IPC14-03	
IPC06-M5	IPC08-01	IPC10-04	IPC14-04	
IPC06-M6	IPC08-02	IPC10-06	IPC15-03	
IPC06-01	IPC08-03	IPC12-01	IPC15-04	

⊖IPCF内螺纹直通/Female Straight



MODEL				
IPCF04-M5	IPCF06-M5	IPCF06-04	IPCF10-01	IPCF12-02
IPCF04-M6	IPCF06-M6	IPCF08-01	IPCF10-02	IPCF12-03
IPCF04-01	IPCF06-01	IPCF08-02	IPCF10-03	IPCF12-04
IPCF04-02	IPCF06-02	IPCF08-03	IPCF10-04	IPCF16-03
IPCF04-03	IPCF06-03	IPCF08-04	IPCF12-01	IPCF16-04

⊖IPOC圆螺纹直通/Round Male Straight



MODEL				
IPOC04-M5	IPOC06-01	IPOC08-03	IPOC12-01	IPOC16-03
IPOC04-M6	IPOC06-02	IPOC08-04	IPOC12-02	IPOC16-04
IPOC04-01	IPOC06-03	IPOC10-01	IPOC12-03	IPOC16-06
IPOC04-02	IPOC06-04	IPOC10-02	IPOC12-04	
IPOC06-M5	IPOC08-01	IPOC10-03	IPOC14-03	
IPOC06-M6	IPOC08-02	IPOC10-04	IPOC14-04	

⊖IPB螺纹正三通/Male Branch Tee



MODEL				
IPB04-M5	IPB06-M6	IPB08-02	IPB10-04	IPB14-04
IPB04-M6	IPB06-01	IPB08-03	IPB12-01	IPB15-03
IPB04-01	IPB06-02	IPB08-04	IPB12-02	IPB15-04
IPB04-02	IPB06-03	IPB10-01	IPB12-03	IPB16-03
IPB04-03	IPB06-04	IPB10-02	IPB12-04	IPB16-04
IPB06-M5	IPB08-01	IPB10-03	IPB14-03	IPB16-06

Metric Size R(PT) Thread Type

⊖IPD螺纹侧三通/Branch Tee



MODEL				
IPD04-M5	IPD06-M6	IPD08-02	IPD10-04	IPD14-04
IPD04-M6	IPD06-01	IPD08-03	IPD12-01	IPD15-03
IPD04-01	IPD06-02	IPD08-04	IPD12-02	IPD15-04
IPD04-02	IPD06-03	IPD10-01	IPD12-03	IPD16-03
IPD04-03	IPD06-04	IPD10-02	IPD12-04	IPD16-04
IPD06-M5	IPD08-01	IPD10-03	IPD14-03	IPD16-06

⊖IPLN新螺纹弯头/New Male Elbow



MODEL				
IPLN04-M5	IPLN06-M6	IPLN08-02	IPLN10-04	IPLN14-04
IPLN04-M6	IPLN06-01	IPLN08-03	IPLN12-01	IPLN16-03
IPLN04-01	IPLN06-02	IPLN08-04	IPLN12-02	IPLN16-04
IPLN04-02	IPLN06-03	IPLN10-01	IPLN12-03	
IPLN04-03	IPLN06-04	IPLN10-02	IPLN12-04	
IPLN06-M5	IPLN08-01	IPLN10-03	IPLN14-03	

⊖IPLF内螺纹弯头/Female Elbow



MODEL				
IPLF04-M5	IPLF06-M6	IPLF08-01	IPLF10-02	IPLF12-03
IPLF04-M6	IPLF06-01	IPLF08-02	IPLF10-03	IPLF12-04
IPLF04-01	IPLF06-02	IPLF08-03	IPLF10-04	IPLF16-04
IPLF04-02	IPLF06-03	IPLF08-04	IPLF12-01	
IPLF06-M5	IPLF06-04	IPLF10-01	IPLF12-02	

⊖IPL45 45度螺纹弯头/Male 45° Elbow



MODEL				
IPL45 04-M5	IPL45 06-M5	IPL45 06-04	IPL45 10-01	IPL45 12-02
IPL45 04-M6	IPL45 06-M6	IPL45 08-01	IPL45 10-02	IPL45 12-03
IPL45 04-01	IPL45 06-01	IPL45 08-02	IPL45 10-03	IPL45 12-04
IPL45 04-02	IPL45 06-02	IPL45 08-03	IPL45 10-04	
IPL45 04-03	IPL45 06-03	IPL45 08-04	IPL45 12-01	

⊖IPK塑料五通/Union Triple

例：IPK06-04,06为两端管口
Example: IPK06-04, 06 is for both ends port



MODEL				
IPK04	IPK08	IPK06-04	IPK08-06	IPK10-08
IPK06	IPK10	IPK08-04	IPK10-06	

⊖IPKD螺纹五通/Male Triple Branch



MODEL				
IPKD04-M5	IPKD06-M5	IPKD06-04	IPKD08-04	IPKD10-04
IPKD04-01	IPKD06-01	IPKD08-01	IPKD10-01	
IPKD04-02	IPKD06-02	IPKD08-02	IPKD10-02	
IPKD04-03	IPKD06-03	IPKD08-03	IPKD10-03	

⊖IPLL加长L型螺纹弯头/Male Long Elbow



MODEL				
IPLL04-M5	IPLL06-M6	IPLL08-01	IPLL10-02	IPLL12-03
IPLL04-M6	IPLL06-01	IPLL08-02	IPLL10-03	IPLL12-04
IPLL04-01	IPLL06-02	IPLL08-03	IPLL10-04	
IPLL04-02	IPLL06-03	IPLL08-04	IPLL12-01	
IPLL06-M5	IPLL06-04	IPLL10-01	IPLL12-02	

⊖PPLL塑料加长型螺纹弯头/Plastic Male Long Elbow



MODEL				
PPLL04-M5	PPLL06-M6	PPLL08-01	PPLL10-02	PPLL12-03
PPLL04-M6	PPLL06-01	PPLL08-02	PPLL10-03	PPLL12-04
PPLL04-01	PPLL06-02	PPLL08-03	PPLL10-04	
PPLL04-02	PPLL06-03	PPLL08-04	PPLL12-01	
PPLL06-M5	PPLL06-04	PPLL10-01	PPLL12-02	

Metric Size R(PT) Thread Type

⊖IPY塑料Y三通/Union Y

例：IPY06-04,06为单口
Example: IPY06-04, 06 is for single port



MODEL				
IPY04	IPY14	IPY06-08	IPY10-06	IPY14-12
IPY06	IPY15	IPY06-12	IPY10-08	IPY16-12
IPY08	IPY16	IPY08-04	IPY10-12	
IPY10	IPY04-06	IPY08-06	IPY12-08	
IPY12	IPY06-04	IPY08-10	IPY12-10	

⊖IPZ塑料四通/Union Cross



MODEL				
IPZ04	IPZ06	IPZ08	IPZ10	IPZ12

⊖IPU塑料直通/Union Straight



MODEL				
IPU04	IPU14	IPU08-06	IPU12-10	IPU16-12
IPU06	IPU15	IPU10-06	IPU14-10	IPU16-14
IPU08	IPU16	IPU10-08	IPU14-12	
IPU10	IPU06-04	IPU12-06	IPU16-08	
IPU12	IPU08-04	IPU12-08	IPU16-10	

⊖IPV塑料弯头/Union Elbow



MODEL				
IPV04	IPV10	IPV15	IPV10-06	IPV16-12
IPV06	IPV12	IPV16	IPV10-08	
IPV08	IPV14	IPV08-06	IPV12-10	

⊖IPH外六角接头/Universal Elbow



MODEL				
IPH04-M5	IPH06-01	IPH08-01	IPH10-01	IPH12-01
IPH04-01	IPH06-02	IPH08-02	IPH10-02	IPH12-02
IPH04-02	IPH06-03	IPH08-03	IPH10-03	IPH12-03
IPH06-M5	IPH06-04	IPH08-04	IPH10-04	IPH12-04

⊖IPL L型螺纹弯头/Male Elbow



MODEL				
IPL04-M5S	IPL04-01S	IPL04-G01S	IPL06-M5S	IPL06-01S
IPL06-G01S				
IPL04-M5	IPL06-01	IPL08-03	IPL12-02	IPL15-04
IPL04-M6	IPL06-02	IPL08-04	IPL12-03	IPL16-02
IPL04-01	IPL06-03	IPL10-01	IPL12-04	IPL16-03
IPL04-02	IPL06-04	IPL10-02	IPL12-06	IPL16-04
IPL04-03	IPL08-M5	IPL10-03	IPL14-03	IPL16-06
IPL06-M5	IPL08-01	IPL10-04	IPL14-04	
IPL06-M6	IPL08-02	IPL12-01	IPL15-03	

⊖IPE塑料正三通/Union Tee



MODEL				
IPE04	IPE14	IPE08-06-08	IPE12-10-12	IPE04-06-04
IPE06	IPE15	IPE10-06-10	IPE14-12-14	IPE06-08-06
IPE08	IPE16	IPE10-08-10	IPE16-10-16	IPE08-10-08
IPE10	IPE06-04-06	IPE12-06-12	IPE16-12-16	IPE10-12-10
IPE12	IPE08-04-08	IPE12-08-12	IPE16-14-16	IPE12-16-12

⊖IPHF串联接头/Female Universal Elbow



MODEL				
IPHF04-M5	IPHF06-01	IPHF08-02	IPHF10-03	IPHF12-02
IPHF04-01	IPHF06-02	IPHF08-03	IPHF10-04	IPHF12-03
IPHF04-02	IPHF06-03	IPHF08-04	IPHF10-01	IPHF12-04
IPHF06-M5	IPHF08-01	IPHF10-02	IPHF12-01	

⊖POL内六角直角接头/Female Banjo



MODEL				
POL04-M5	POL06-01	POL08-01	POL10-01	POL12-01
POL04-01	POL06-02	POL08-02	POL10-02	POL12-02
POL04-02	POL06-03	POL08-03	POL10-03	POL12-03
POL06-M5	POL06-04	POL08-04	POL10-04	POL12-04

Metric Size R(PT) Thread Type

⊖IPHT(2)串联直角(2)/Male Double Universal



MODEL				
IPHT04-M5(2)	IPHT06-01(2)	IPHT08-01(2)	IPHT10-01(2)	IPHT12-02(2)
IPHT04-01(2)	IPHT06-02(2)	IPHT08-02(2)	IPHT10-02(2)	IPHT12-03(2)
IPHT04-02(2)	IPHT06-03(2)	IPHT08-03(2)	IPHT10-03(2)	IPHT12-04(2)
IPHT06-M5(2)	IPHT06-04(2)	IPHT08-04(2)	IPHT10-04(2)	

⊖IPHT(3) 串联直角(3)/Male Triple Universal



MODEL				
IPHT04-M5(3)	IPHT06-01(3)	IPHT08-02(3)	IPHT10-02(3)	IPHT12-02(3)
IPHT04-01(3)	IPHT06-02(3)	IPHT08-03(3)	IPHT10-03(3)	IPHT12-03(3)
IPHT04-02(3)	IPHT06-03(3)	IPHT08-04(3)	IPHT10-04(3)	IPHT12-04(3)
IPHT06-M5(3)	IPHT08-01(3)	IPHT10-01(3)		

⊖IPA双管外六角接头/Double Banjo



MODEL				
IPA04-01	IPA06-01	IPA08-02	IPA10-03	IPA12-04

⊖IPAF双管串联接头/Double Female Banjo



MODEL				
IPAF04-01	IPAF06-01	IPAF08-02	IPAF10-03	IPAF12-04

⊖IPAT(2)双管串联直角(2)/Double Branch



MODEL				
IPAT04-01(2)	IPAT06-02(2)	IPAT08-03(2)	IPAT10-04(2)	
IPAT04-02(2)	IPAT06-03(2)	IPAT08-04(2)	IPAT12-02(2)	
IPAT04-03(2)	IPAT08-01(2)	IPAT10-02(2)	IPAT12-03(2)	
IPAT06-01(2)	IPAT08-02(2)	IPAT10-03(2)	IPAT12-04(2)	

⊖IPAT(3)双管串联直角(3)/Double Branch



MODEL				
IPAT04-01(3)	IPAT06-02(3)	IPAT08-03(3)	IPAT10-04(3)	
IPAT04-02(3)	IPAT06-03(3)	IPAT08-04(3)	IPAT12-02(3)	
IPAT04-03(3)	IPAT08-01(3)	IPAT10-02(3)	IPAT12-03(3)	
IPAT06-01(3)	IPAT08-02(3)	IPAT10-03(3)	IPAT12-04(3)	

⊖IPM隔板直通/Bulkhead Union



MODEL				
IPM04	IPM08	IPM12	IPM16	
IPM06	IPM10	IPM14		

⊖PPM型料隔板接头/Plastic Bulkhead Union



MODEL				
PPM06	PPM08	PPM10	PPM12	

⊖IPMF隔板内螺纹直通/Bulkhead Female



MODEL				
IPMF04-M5	IPMF06-02	IPMF08-03	IPMF10-04	IPMF16-04
IPMF04-01	IPMF06-03	IPMF08-04	IPMF12-01	IPMF16-06
IPMF04-02	IPMF06-04	IPMF10-01	IPMF12-02	
IPMF06-M5	IPMF08-01	IPMF10-02	IPMF12-03	
IPMF06-01	IPMF08-02	IPMF10-03	IPMF12-04	

⊖IPX Y型螺纹三通/Branch Y



MODEL				
IPX04-M5	IPX06-M5	IPX06-04	IPX10-01	IPX12-02
IPX04-M6	IPX06-M6	IPX08-01	IPX10-02	IPX12-03
IPX04-01	IPX06-01	IPX08-02	IPX10-03	IPX12-04
IPX04-02	IPX06-02	IPX08-03	IPX10-04	
IPX04-03	IPX06-03	IPX08-04	IPX12-01	

Metric Size R(PT) Thread Type

⊖PXJ插入型五通/Reducer Double Y



MODEL				
PXJ04	PXJ06-04	PXJ08-04	PXJ10-04	PXJ10-08
PXJ06	PXJ08	PXJ08-06	PXJ10-06	

⊖PXG塑料Y五通/Reducer Double Y Union



MODEL				
PXG04	PXG08	PXG08-04		
PXG06	PXG06-04	PXG08-06		

⊖PXT Y型螺纹五通/Male Double Y



MODEL				
PXT04-01	PXT06-01	PXT06-03	PXT08-01	PXT08-03
PXT04-02	PXT06-02	PXT06-04	PXT08-02	PXT08-04

⊖IPBJ插入型正三通/Plug-in Branch Tee



MODEL				
IPBJ04	IPBJ08	IPBJ12	IPBJ08-06	IPBJ12-10
IPBJ06	IPBJ10	IPBJ06-04	IPBJ10-08	

⊖IPDJ插入型侧三通/Plug-in Branch Tee



MODEL				
IPDJ04	IPDJ08	IPDJ12	IPDJ08-06	IPDJ12-10
IPDJ06	IPDJ10	IPDJ06-04	IPDJ10-08	

⊖IPKJ插入型五通/Plug-in Union Triple



MODEL				
IPKJ04	IPKJ08	IPKJ06-04	IPKJ08-06	IPKJ10-08
IPKJ06	IPKJ10	IPKJ08-04	IPKJ10-06	

⊖IPLJ插入型弯头/Plug-in Elbow



MODEL				
IPLJ04	IPLJ10	IPLJ06-04	IPLJ10-06	IPLJ12-10
IPLJ06	IPLJ12	IPLJ08-04	IPLJ10-08	
IPLJ08		IPLJ08-06	IPLJ12-08	

⊖IPGJ插入型直通/Plug-in Reducer



MODEL				
IPGJ06-04	IPGJ08-06	IPGJ10-08	IPGJ12-08	IPGJ16-12
IPGJ08-04	IPGJ10-06	IPGJ12-06	IPGJ12-10	

⊖IPYJ插入型Y三通/Plug-in Y



MODEL				
IPYJ04	IPYJ10	IPYJ06-04	IPYJ10-06	IPYJ12-10
IPYJ06	IPYJ12	IPYJ08-04	IPYJ10-08	
IPYJ08		IPYJ08-06	IPYJ12-08	

注：插入型接头前置数字为公端，后置数字为插管口(若与公端数字相同则省略)
例：IPGJ06-04，06为公端，04为插管口。
PXJ06，公端与插管口规格都是06。

⊖IPLM隔板弯头/Bulkhead Elbow



MODEL				
IPLM04	IPLM08	IPLM12		
IPLM06	IPLM10			

Note: The leading number of the plug-in fitting is the male end, and the trailing number is the tube port (if the number is the same as the male end, it will be omitted)
Example: IPGJ06-04, 06 is the male end and 04 is the tube size.PXJ06,The specifications for both the male end and the tube port are 06.

Metric Size R(PT) Thread Type

PPGJ插入型塑料直通/Plastic Plug-in Reducer



MODEL				
PPGJ06-04	PPGJ08-06	PPGJ10-08	PPGJ12-08	
PPGJ08-04	PPGJ10-06	PPGJ12-06	PPGJ12-10	

IPLJ45插入型45度弯头/Plug-in 45° Elbow



MODEL				
IPLJ45 04	IPLJ45 06	IPLJ45 08	IPLJ45 10	IPLJ45 12

IPP管塞/Plug



MODEL				
IPP04	IPP06	IPP08	IPP10	IPP12

PGT外六角双向接头/Male Rotary Tee



MODEL				
PGT04-01	PGT06-02	PGT08-02		
PGT06-01	PGT08-01	PGT10-02		

PPF管帽/Pipe Cap



MODEL				
PPF04	PPF07	PPF10		
PPF06	PPF08	PPF12		

IPZR螺纹四通/Thread Cross

New



MODEL				
IPZR04-01	IPZR06-02	IPZR08-02	IPZR10-03	IPZR12-03
IPZR04-02	IPZR06-03	IPZR08-03	IPZR10-04	IPZR12-04
IPZR06-01	IPZR08-01	IPZR10-02	IPZR12-02	

IPAV Y型直角三通系列/Branch Union Elbow

New



MODEL				
IPAV04	IPAV06	IPAV08	IPAV10	IPAV12

IPAX Y型直角螺纹三通系列/Branch Elbow

New



MODEL				
IPAX04-M5	IPAX06-01	IPAX08-01	IPAX10-02	IPAX12-02
IPAX04-01	IPAX06-02	IPAX08-02	IPAX10-03	IPAX12-03
IPAX04-02	IPAX06-03	IPAX08-03	IPAX10-04	IPAX12-04

异径双口三通/Unequal Twin Triple Tee

New



MODEL				
IPKW08-04	IPKW08-06	IPKW10-06	IPKW12-08	

快插式气动管接头
Quick Connecting Tube Fittings
ISAIAH

Metric Size G(PF) Thread Type

IPC-G螺纹直通-G螺纹/Male Straight



MODEL				
IPC04-G01	IPC06-G03	IPC08-G04	IPC12-G01	IPC14-G04
IPC04-G02	IPC06-G04	IPC10-G01	IPC12-G02	IPC15-G03
IPC04-G03	IPC08-G01	IPC10-G02	IPC12-G03	IPC15-G04
IPC06-G01	IPC08-G02	IPC10-G03	IPC12-G04	IPC16-G03
IPC06-G02	IPC08-G03	IPC10-G04	IPC14-G03	IPC16-G04

IPCF-G内螺纹直通-G螺纹/Female Straight



MODEL				
IPCF04-G01	IPCF06-G02	IPCF08-G02	IPCF10-G02	IPCF12-G02
IPCF04-G02	IPCF06-G03	IPCF08-G03	IPCF10-G03	IPCF12-G03
IPCF04-G03	IPCF06-G04	IPCF08-G04	IPCF10-G04	IPCF12-G04
IPCF06-G01	IPCF08-G01	IPCF10-G01	IPCF12-G01	

IPOC-G圆螺纹直通-G螺纹/Round Male Straight



MODEL				
IPOC04-G01	IPOC06-G03	IPOC08-G04	IPOC12-G01	IPOC16-G04
IPOC04-G02	IPOC06-G04	IPOC10-G01	IPOC12-G02	
IPOC04-G03	IPOC08-G01	IPOC10-G02	IPOC12-G03	
IPOC06-G01	IPOC08-G02	IPOC10-G03	IPOC12-G04	
IPOC06-G02	IPOC08-G03	IPOC10-G04	IPOC16-G03	

IPB-G螺纹正三通-G螺纹/Male Branch Tee



MODEL				
IPB04-G01	IPB06-G03	IPB08-G04	IPB12-G01	IPB14-G04
IPB04-G02	IPB06-G04	IPB10-G01	IPB12-G02	IPB15-G03
IPB04-G03	IPB08-G01	IPB10-G02	IPB12-G03	IPB15-G04
IPB06-G01	IPB08-G02	IPB10-G03	IPB12-G04	IPB16-G03
IPB06-G02	IPB08-G03	IPB10-G04	IPB14-G03	IPB16-G04

IPL-G L型螺纹弯头-G螺纹/Male Elbow



MODEL				
IPL04-G01	IPL06-G03	IPL08-G04	IPL12-G01	IPL14-G04
IPL04-G02	IPL06-G04	IPL10-G01	IPL12-G02	IPL15-G03
IPL04-G03	IPL08-G01	IPL10-G02	IPL12-G03	IPL15-G04
IPL06-G01	IPL08-G02	IPL10-G03	IPL12-G04	IPL16-G03
IPL06-G02	IPL08-G03	IPL10-G04	IPL14-G03	IPL16-G04

IPD-G螺纹侧三通-G螺纹/Branch Tee



MODEL				
IPD04-G01	IPD06-G04	IPD10-G01	IPD12-G02	IPD15-G03
IPD04-G02	IPD08-G01	IPD10-G02	IPD12-G03	IPD15-G04
IPD06-G01	IPD08-G02	IPD10-G03	IPD12-G04	IPD16-G03
IPD06-G02	IPD08-G03	IPD10-G04	IPD14-G03	IPD16-G04
IPD06-G03	IPD08-G04	IPD12-G01	IPD14-G04	

IPL45-G 45度螺纹弯头-G螺纹/Male 45° Elbow



MODEL				
IPL45 04-G01	IPL45 06-G02	IPL45 08-G02	IPL45 10-G02	IPL45 12-G02
IPL45 04-G02	IPL45 06-G03	IPL45 08-G03	IPL45 10-G03	IPL45 12-G03
IPL45 04-G03	IPL45 06-G04	IPL45 08-G04	IPL45 10-G04	IPL45 12-G04
IPL45 06-G01	IPL45 08-G01	IPL45 10-G01	IPL45 12-G01	

IPLN-G新螺纹弯头-G螺纹/New Male Elbow



MODEL				
IPLN04-G01	IPLN06-G03	IPLN08-G04	IPLN12-G01	IPLN14-G04
IPLN04-G02	IPLN06-G04	IPLN10-G01	IPLN12-G02	IPLN16-G03
IPLN04-G03	IPLN08-G01	IPLN10-G02	IPLN12-G03	IPLN16-G04
IPLN06-G01	IPLN08-G02	IPLN10-G03	IPLN12-G04	
IPLN06-G02	IPLN08-G03	IPLN10-G04	IPLN14-G03	

Metric Size G(PF) Thread Type

IPKD-G螺纹五通-G螺纹/Male Triple Branch



MODEL				
IPKD04-G01	IPKD06-G02	IPKD08-G01	IPKD08-G04	IPKD10-G03
IPKD04-G02	IPKD06-G03	IPKD08-G02	IPKD10-G01	IPKD10-G04
IPKD06-G01	IPKD06-G04	IPKD08-G03	IPKD10-G02	

IPLL-G(加长L型螺纹弯头-G螺纹/Male Long Elbow



MODEL				
IPLL04-G01	IPLL06-G03	IPLL08-G03	IPLL10-G03	IPLL12-G03
IPLL04-G02	IPLL06-G04	IPLL08-G04	IPLL10-G04	IPLL12-G04
IPLL06-G01	IPLL08-G01	IPLL10-G01	IPLL12-G01	
IPLL06-G02	IPLL08-G02	IPLL10-G02	IPLL12-G02	

IPHF-G串联接头-G螺纹/Female Universal Elbow



MODEL				
IPHF04-G01	IPHF06-G03	IPHF08-G03	IPHF10-G03	IPHF12-G04
IPHF04-G02	IPHF06-G04	IPHF08-G04	IPHF10-G04	
IPHF06-G01	IPHF08-G01	IPHF10-G01	IPHF12-G02	
IPHF06-G02	IPHF08-G02	IPHF10-G02	IPHF12-G03	

IPH-G外六角接头-G螺纹/Universal Elbow



MODEL				
IPH04-G01	IPH06-G03	IPH08-G03	IPH10-G03	IPH12-G04
IPH04-G02	IPH06-G04	IPH08-G04	IPH10-G04	
IPH06-G01	IPH08-G01	IPH10-G01	IPH12-G02	
IPH06-G02	IPH08-G02	IPH10-G02	IPH12-G03	

IPX-G Y型螺纹三通-G螺纹/Branch Y



MODEL				
IPX04-G01	IPX06-G02	IPX08-G02	IPX10-G02	IPX12-G02
IPX04-G02	IPX06-G03	IPX08-G03	IPX10-G03	IPX12-G03
IPX04-G03	IPX06-G04	IPX08-G04	IPX10-G04	IPX12-G04
IPX06-G01	IPX08-G01	IPX10-G01	IPX12-G01	

IPHT-G(2)串联直角(2)-G螺纹/Male Double Universal



MODEL				
IPHT04-G01(2)	IPHT06-G03(2)	IPHT08-G04(2)	IPHT10-G04(2)	
IPHT04-G02(2)	IPHT08-G01(2)	IPHT10-G01(2)	IPHT12-G02(2)	
IPHT06-G01(2)	IPHT08-G02(2)	IPHT10-G02(2)	IPHT12-G03(2)	
IPHT06-G02(2)	IPHT08-G03(2)	IPHT10-G03(2)	IPHT12-G04(2)	

IPHT-G(3)串联直角(3) -G螺纹/Male Triple Universal



MODEL				
IPHT04-G01(3)	IPHT06-G03(3)	IPHT08-G04(3)	IPHT10-G04(3)	
IPHT04-G02(3)	IPHT08-G01(3)	IPHT10-G01(3)	IPHT12-G02(3)	
IPHT06-G01(3)	IPHT08-G02(3)	IPHT10-G02(3)	IPHT12-G03(3)	
IPHT06-G02(3)	IPHT08-G03(3)	IPHT10-G03(3)	IPHT12-G04(3)	

IPAT-G(2)双管串联直角(2)-G螺纹/Double Branch



MODEL				
IPAT04-G01(2)	IPAT06-G02(2)	IPAT08-G03(2)	IPAT10-G04(2)	
IPAT04-G02(2)	IPAT06-G03(2)	IPAT08-G04(2)	IPAT12-G02(2)	
IPAT04-G03(2)	IPAT08-G01(2)	IPAT10-G02(2)	IPAT12-G03(2)	
IPAT06-G01(2)	IPAT08-G02(2)	IPAT10-G03(2)	IPAT12-G04(2)	

IPAT-G(3)双管串联直角(3)-G螺纹/Double Branch



MODEL				
IPAT04-G01(3)	IPAT06-G02(3)	IPAT08-G03(3)	IPAT10-G04(3)	
IPAT04-G02(3)	IPAT06-G03(3)	IPAT08-G04(3)	IPAT12-G02(3)	
IPAT04-G03(3)	IPAT08-G01(3)	IPAT10-G02(3)	IPAT12-G03(3)	
IPAT06-G01(3)	IPAT08-G02(3)	IPAT10-G03(3)	IPAT12-G04(3)	

PXT-G Y型螺纹五通-G螺纹/Male Double Y



MODEL				
PXT04-G01	PXT06-G02	PXT08-G01	PXT08-G04	
PXT04-G02	PXT06-G03	PXT08-G02		
PXT06-G01	PXT06-G04	PXT08-G03		

Metric Size G(PF) Thread Type

IPA-G双管外六角接头-G螺纹/Double Banjo



MODEL				
IPA04-G01	IPA06-G01	IPA08-G02	IPA10-G03	IPA12-G04

IPAF-G双管串联接头-G螺纹/Double Female Banjo



MODEL				
IPAF04-G01	IPAF06-G01	IPAF08-G02	IPAF10-G03	IPAF12-G04

PGT-G外六角双向接头-G螺纹/Male Rotary Tee



MODEL				
PGT04-G01	PGT06-G01	PGT06-G02	PGT08-G01	
PGT08-G02	PGT10-G02			

IPZR-G螺纹四通-G螺纹/Thread Cross

New



MODEL				
IPZR04-G01	IPZR06-G02	IPZR08-G02	IPZR10-G03	IPZR12-G03
IPZR04-G02	IPZR06-G03	IPZR08-G03	IPZR10-G04	IPZR12-G04
IPZR06-G01	IPZR08-G01	IPZR10-G02	IPZR12-G02	

IPAX-G Y型直角螺纹三通-G螺纹系列/Branch Elbow

New



MODEL				
IPAX04-G01	IPAX06-G02	IPAX08-G03	IPAX10-G04	IPAX12-G04
IPAX04-G02	IPAX08-G01	IPAX10-G02	IPAX12-G02	
IPAX06-G01	IPAX08-G02	IPAX10-G03	IPAX12-G03	

Inch Size NPT Thread Type

IPC-N螺纹直通-NPT螺纹/Male Straight



MODEL				
IPC5/32-N01	IPC1/4-N01	IPC5/16-N01	IPC3/8-N01	IPC1/2-N01
IPC5/32-N02	IPC1/4-N02	IPC5/16-N02	IPC3/8-N02	IPC1/2-N02
IPC3/16-N01	IPC1/4-N03	IPC5/16-N03	IPC3/8-N03	IPC1/2-N03
IPC3/16-N02	IPC1/4-N04	IPC5/16-N04	IPC3/8-N04	IPC1/2-N04

IPCF-N内螺纹直通-NPT螺纹/Female Straight



MODEL				
IPCF5/32-N01	IPCF1/4-N01	IPCF5/16-N01	IPCF3/8-N01	IPCF1/2-N01
IPCF5/32-N02	IPCF1/4-N02	IPCF5/16-N02	IPCF3/8-N02	IPCF1/2-N02
IPCF3/16-N01	IPCF1/4-N03	IPCF5/16-N03	IPCF3/8-N03	IPCF1/2-N03
IPCF3/16-N02	IPCF1/4-N04	IPCF5/16-N04	IPCF3/8-N04	IPCF1/2-N04

IPB-N螺纹正三通-NPT螺纹/Male Branch Tee



MODEL				
IPB5/32-N01	IPB1/4-N01	IPB5/16-N01	IPB3/8-N01	IPB1/2-N01
IPB5/32-N02	IPB1/4-N02	IPB5/16-N02	IPB3/8-N02	IPB1/2-N02
IPB3/16-N01	IPB1/4-N03	IPB5/16-N03	IPB3/8-N03	IPB1/2-N03
IPB3/16-N02	IPB1/4-N04	IPB5/16-N04	IPB3/8-N04	IPB1/2-N04

IPD-N螺纹侧三通-NPT螺纹/Branch Tee



MODEL				
IPD5/32-N01	IPD1/4-N01	IPD5/16-N01	IPD3/8-N01	IPD1/2-N01
IPD5/32-N02	IPD1/4-N02	IPD5/16-N02	IPD3/8-N02	IPD1/2-N02
IPD3/16-N01	IPD1/4-N03	IPD5/16-N03	IPD3/8-N03	IPD1/2-N03
IPD3/16-N02	IPD1/4-N04	IPD5/16-N04	IPD3/8-N04	IPD1/2-N04

IPLF内螺纹弯头/Female Eblow



MODEL				
IPLF5/32-N01	IPLF1/4-N01	IPLF5/16-N02	IPLF3/8-N04	
IPLF5/32-N02	IPLF1/4-N02	IPLF5/16-N03	IPLF1/2-N02	
IPLF3/16-N01	IPLF1/4-N03	IPLF3/8-N02	IPLF1/2-N03	
IPLF3/16-N02	IPLF5/16-N01	IPLF3/8-N03	IPLF1/2-N04	

IPL-N L型螺纹弯头-NPT螺纹/Male Elbow



MODEL				
IPL5/32-N01	IPL1/4-N01	IPL5/16-N01	IPL3/8-N01	IPL1/2-N01
IPL5/32-N02	IPL1/4-N02	IPL5/16-N02	IPL3/8-N02	IPL1/2-N02
IPL3/16-N01	IPL1/4-N03	IPL5/16-N03	IPL3/8-N03	IPL1/2-N03
IPL3/16-N02	IPL1/4-N04	IPL5/16-N04	IPL3/8-N04	IPL1/2-N04

IPK塑料五通/Union Triple



MODEL				
IPK3/16-5/32	IPK1/4-3/16	IPK5/16-1/4	IPK3/8-5/16	

IPU塑料直通/Union Straight



MODEL				
IPU5/32	IPU5/16	IPU3/16-5/32	IPU3/8-5/16	
IPU3/16	IPU3/8	IPU1/4-3/16	IPU1/2-3/8	
IPU1/4	IPU1/2	IPU5/16-1/4		

IPY 塑料Y三通/Union Y



MODEL				
IPY5/32	IPY5/16	IPY3/16-5/32	IPY1/2-3/8	
IPY3/16	IPY3/8	IPY1/4-3/16		
IPY1/4	IPY1/2	IPY3/8-5/16		

IPE 塑料正三通/Union Tee



MODEL				
IPE5/32	IPE5/16	IPE3/16-5/32-3/16	IPE3/8-5/16-3/8	
IPE3/16	IPE3/8	IPE1/4-3/16-1/4	IPE1/2-3/8-1/2	
IPE1/4	IPE1/2	IPE5/16-1/4-5/16		

Inch Size NPT Thread Type

IPV塑料弯头/Union Elbow



MODEL				
IPV5/32	IPV1/4	IPV3/8		
IPV3/16	IPV5/16	IPV1/2		

IPZ塑料四通/Union Cross



MODEL				
IPZ5/32	IPZ5/16	IPZ1/2		
IPZ1/4	IPZ3/8			

IPHF-N串联接头-NPT螺纹/Female Universal Elbow



MODEL				
IPHF5/32-N01	IPHF1/4-N02	IPHF3/8-N02	IPHF1/2-N03	
IPHF3/16-N01	IPHF5/16-N01	IPHF3/8-N03	IPHF1/2-N04	
IPHF3/16-N02	IPHF5/16-N02	IPHF3/8-N04		
IPHF1/4-N01	IPHF5/16-N03	IPHF1/2-N02		

IPH-N外六角接头-NPT螺纹/Universal Elbow



MODEL				
IPH5/32-N01	IPH1/4-N02	IPH5/16-N03	IPH3/8-N03	IPH1/2-N03
IPH3/16-N01	IPH1/4-N03	IPH5/16-N04	IPH1/2-N04	
IPH3/16-N02	IPH5/16-N01	IPH3/8-N01	IPH3/8-N04	
IPH1/4-N01	IPH5/16-N02	IPH3/8-N02	IPH1/2-N02	

IPM隔板直通/Bulkhead Union



MODEL				
IPM5/32	IPM1/4	IPM3/8		
IPM3/16	IPM5/16	IPM1/2		

IPX-N Y型螺纹三通-NPT螺纹/Branch Y



MODEL				
IPX5/32-N01	IPX1/4-N01	IPX5/16-N02	IPX3/8-N02	IPX1/2-N02
IPX5/32-N02	IPX1/4-N02	IPX5/16-N03	IPX3/8-N03	IPX1/2-N03
IPX3/16-N01	IPX1/4-N03	IPX5/16-N04	IPX3/8-N04	IPX1/2-N04
IPX3/16-N02	IPX5/16-N01	IPX3/8-N01	IPX1/2-N01	

IPGJ插入型直通/Plug-in Reducer



MODEL				
IPGJ1/4-5/32	IPGJ3/8-5/16	IPGJ5/16-1/4	IPGJ1/2-3/8	



备注：以下产品可以选用材质为铁，不锈钢。如果你需要不锈钢材质时，请在型号后加-SUS，比如SM102-SUS。
Note: the following products can be chosen material for iron, stainless steel.If you order stainless steel mate rial, Pls add -SUS,For example:SM102-SUS.

⊖SM



MODEL			
SM102	SM103	SM104	

⊖SH



MODEL		
SH302 For 5/16"hose	SH303 For 3/8"hose	SH304 For 1/2"hose

⊖SF



MODEL			
SF202	SF203	SF204	

⊖SA



MODEL			
SA402 5X8	SA403 6.5X10	SA404 8X12	

⊖PF



MODEL			
PF602	PF603	PF604	

⊖PA



MODEL			
PA802 5X8	PA803 6.5X10	PA804 8X12	

⊖PM



MODEL			
PM502	PM503	PM504	

⊖PH



MODEL		
PH702 For 5/16"hose	PH703 For 3/8"hose	PH704 For 1/2"hose

⊖多路分支配管・Y形



MODEL			
SF2A	SF3A		

⊖多路分支配管・直形



MODEL			
SF2B	SF4B	SF6B	
SF3B	SF5B		







订购号 / Order

PU　8X5 - 100 - □

④ 颜色/Color

代号/Code	TR	BK	BU	OR
颜色/Color	透明/Transparent	黑色/Black	蓝色/Blue	橙色/Orange

代号/Code	TRBU	TRGN
颜色/Color	透明蓝/ Transparent blue	透明绿/ Transparent green

代号/Code	TRRD	DKBU	LTBU
颜色/Color	透明红/ Transparent red	深蓝/Dark blue	浅蓝/Light blue

代号/Code	YL	GN	RD	SV	WH
颜色/Color	黄色/Yellow	绿色/Green	红色/Red	银色/Silver	白色/White

③ 长度/Length
100m/卷 (Roll)；弹簧管长度 / Coil Tube Length：3、6、7.5、9、12、15

② 管径/ Tube Diameter

代号/Code	外径/O.D	内径/I.D
8x5	Φ8	Φ5

① 气管代号/Tube Code

代号/Code	PU	UC	PA	AC
气管/Tube	PU管/Polyurethane Tube	PU弹簧管/Polyurethane Coil Tube	尼龙管/Nylon Tube	PA弹簧管/Nylon Coil Tube

特点 / Features

- 可塑性聚胺脂材质，符合ROHS环保要求
- 高弹性：小的弯曲半径使PU管能通过紧密空间
- 防打结：比其他塑料管有较佳的防打结效果
- 优异的回型性：可承受重复的伸缩
- 防磨损：使用期限长，适用于易磨损的环境
- 气体的渗透性低：减低了渗漏和污染的问题
- 抗溶解性佳：没有溶剂会漏出因此不会污染环境
- 压缩性低：维持优良的物理性能
- 广泛的抵抗性：对化学物、水、燃料、油和菌有一定抵抗力

- Flexible polyurethane material, which is reached the ROHS environmentalprotection requirements
- High elasticity, the PU tube can through a tight space when the tube with asmall bending
- The knot: knot effects are better than other plastic pipes
- Excellent plastic back: withstand repeated expansion
- Breakage-proof: long life span, which is applica ble to the easy wear and tear environment
- Low permeability of gas: decrease the permeability and pollution
- Good resistance to dissolve: no solvent will be leaked out, the environmentpollution won't be happened
- Low compressibility: maintaining good physical properties
- A wide range of resistance: chemicals, watar, fual, oil and bacteria with acertain resistance

技术参数 / Specifications

材料/Material	PU
使用流体/Fluid	空气/Air
爆破压力范围/Burst pressure	见下表/Under the table
工作压力范围/Operating Pressure	见下表/Under the table
使用温度范围/Operating Temperature	-20~60℃

规格 Code	外径 (mm) O. D	内径 (mm) I. D	工作压力 (23℃ ,bar) Operating Pressure	爆破压力 (23℃ ,bar) Burst Pressure	弯曲半径 (mm) Bend Radius	每卷长度 (m) Length
2x1	Φ2	Φ1	8	44	4	200
3x2	Φ3	Φ2	7.5	30	6	200
4x2	Φ4	Φ2	8	44	8	200
4x2.5	Φ4	Φ2.5	8	35	10	200
5x3	Φ5	Φ3	8	35	15	200
6x4	Φ6	Φ4	7.5	30	15	200
8x5	Φ8	Φ5	8	35	20	100
8x5.5	Φ8	Φ5.5	6	24	20	100
8x6	Φ8	Φ6	4	16	25	100
10x6.5	Φ10	Φ6.5	8	32	25	100
10x7.5	Φ10	Φ7.5	4	16	35	100
12x8	Φ12	Φ8	7.5	30	35	100
12x9.5	Φ12	Φ9.5	4	16	50	100
14x10	Φ14	Φ10	6	24	60	50
16x11	Φ16	Φ11	8	35	70	50
16x12	Φ16	Φ12	7.5	30	80	50

备注：UC弹簧管长度、颜色可以定做。
Note:We can do other length and color for UC tube.

特点 / Features

- 具有良好的柔软性，弯曲半径小，能通过紧密空间
- 良好的耐磨性和耐老化性，使用寿命长
- 具有更好的耐温性和耐压性
- 外层包覆阻燃合成料，能有效阻止焊渣、火花对气管的损害
- 阻燃等级为V0（UL94）

- Good flexibility, small bending radius, and it can pass through tight spaces
- Good wear resistance and aging resistance, long service life
- Better temperature and pressure resistance
- The outer layer is coated with flame retardant synthetic material, which can effectively prevent welding slag and sparks from damaging the tube
- Flame retardant grade V0 (UL94)



订购号 / Order

FPU 8X5 - 100 - □

① 阻燃管代号/Tube Code

② 管径/ Tube Diameter

代号/Code	外径/O.D	内径/I.D
8x5	Φ8	Φ5

③ 长度/Length
100m/卷（Roll）

④ 颜色/Color

代号/Code	BK	BU	YL
颜色/Color	黑色/Black	蓝色/Blue	黄色/Yellow
代号/Code	RD	WH	GN
颜色/Color	红色/Red	白色/White	绿色/Green

技术参数 / Specifications

材料 / Material	聚氨脂(内层)+阻燃合成料(外层) Polyurethane (inner layer)+flame retardant synthetic material (outer layer)
使用流体 / Fluid	空气 / Air
爆破压力范围 / Burst pressure	见下表 / Under the table
工作压力范围 / Operating Pressure	见下表 / Under the table
使用温度范围 / Operating Temperature	-20～60 ℃

技术指标 / Technical Indicators

规格 Code	内管尺寸 / Inner tube size		阻燃层 / Flame retardant layer	工作压力 (20°C,bar)	爆破压力 (20°C,bar)	最小弯曲半径 (mm)	每圈长度 (m)
	外径（mm）	内径（mm）	壁厚（mm）				
	O.D	I.D	Thickness	Operating Pressure	Burst Pressure	The radius of curvature	Length
6×4	Φ6	Φ4	1	10	30	15	100
8×5	Φ8	Φ5	1	10	30	25	100
10×6.5	Φ10	Φ6.5	1	10	30	35	100
12×8	Φ12	Φ8	1	10	30	45	50/100

聚氨脂阻燃管
Polyurethane Flame-retardant Tube
ISAIAH

B
聚氨脂阻燃管
Polyurethane Flame-retardant Tube

剥管器
Tube Peeler



使用图 / Diagram

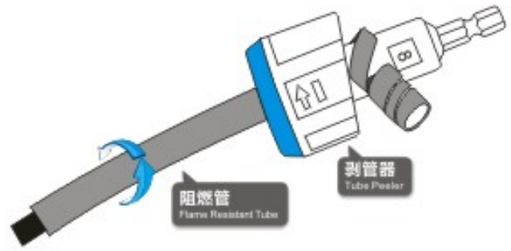

特点 / Features

- 可无伤、干净、高效的剥离阻燃管外层管
- 即插即用，不用调整刀片距离等，简单快捷
- 可直接安装在电动或气动螺丝刀上
- 外层管剥离后不会有残留，做到干净处理

- The outer layer of the flame-retardant tube can be peeled off without damage, cleanly, and efficiently.
- Plug and play operation, it's no need to ajust blade distance, ensuring simplicity and speed.
- It can be directly installed on electric or pneumatic screwdrivers.
- After peeling off the outer tube, there will be no residue, and it should be treated cleanly.

剥管器 / Tube Peeler			
BGQ06	BGQ08	BGQ10	BGQ12

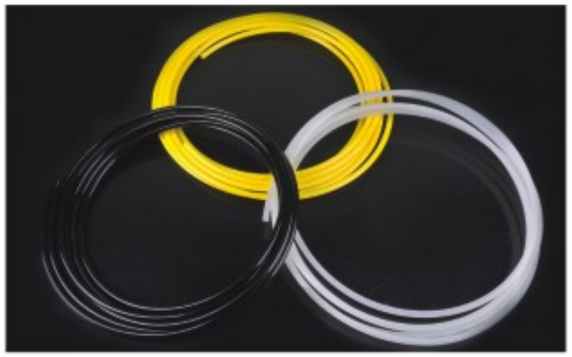



特点 / Features

- 机械强度高，韧性好，有较高的抗拉、抗压强度
- 耐疲劳性能突出，制件经多次反复屈折仍能保持原有机械强度
- 软化点高，耐热
- 表面光滑，摩擦系数小，耐磨
- 耐腐蚀，十分耐碱，还耐弱酸、机油、汽油
- 有自熄性，无毒，无臭，耐候性好，有良好的抗菌、抗霉能力
- 有优良的电气性能，电绝缘性好

- High mechanical strength, good toughness, high tensile and compressive strength
- Outstanding fatigue resistance, keeping the original mechanical strength by the inflectional repeatedly
- High point of softening and heat resistant
- Smooth surface, small friction coefficient, wear resistance
- With corrosion resistance, alkali resistance and also resistant to weak acid, oil and gasoline
- With self-extinguishing, non-toxic, odou rless, good weather ability, good antibacterial and mildew resistance
- Excellent electrical performance and good electrical insulation

技术参数 / Specifications

材料/Material	PA6、PA12
使用流体/Fluid	空气、水 / Air、Water
爆破压力范围/Burst pressure	见下表/Under the table
工作压力范围/Operating Pressure	见下表/Under the table
使用温度范围/Operating Temperature	-15~60℃

规格 Code	外径 (mm) O. D	内径 (mm) I. D	工作压力 (20℃ ,bar) Operating Pressure	爆破压力 (20℃ ,bar) Burst Pressure	最小弯曲半径 (mm) The radius of curvature	每圈长度 (m) Length
4×2.5	Φ4	Φ2.5	15	72	15	200
6×4	Φ6	Φ4	18	90	23	200
8×6	Φ8	Φ6	15	72	36	100
10×8	Φ10	Φ8	12	60	45	100
12×9	Φ12	Φ9	15	72	54	100

NOTE：尼龙管只有白黑黄蓝四种颜色可订购
Nylon tubes are available in white,black,yellow and blue only

气管剪 TUBE CUT



BU：蓝色/Blue
TRBU:透明蓝/Transparent blue

气枪 IAG-B



BU：蓝色/ Blue
RD：红色/ Red

AD-2-100A

AD-2-100A 附带25度管嘴，使操作效率提高，也会减轻手腕的劳动程度
For comfortable control over its pinpointed dusting with less fatigue



AD-2-300A

标准长300mm管嘴适用类型: 它能在标准管嘴不能够到的深处地方进行特定地方的除尘作业
Ideal for dusting at difficult-to-reach area with standard Nozzle type(300mm)

AD-2-0N

适用类型：金属，木材的灰尘，汽车设备，钣金的粉尘，水分去除等
Applicable for dusting metal and wood cut, automotive dust and paint wet



AD-2-100N

标准长100mm 管嘴适用类型：它能在标准管嘴不能够到的深处地方进行特定地方的除尘作业
Ideal for dusting at difficult-to-reach area with standard Nozzle type(100mm)



技术参数 / Specifications

工作介质/Working Medium	压缩空气/Compressed air
介质温度与环境温度/Media Temperature and Ambient Temperature	5~60℃
公称压力/Nominal Pressure	0.8MPa

喷口通径/Spray Port Diameter

PQP 喷气枪 /PQP Air Gun : Φ2.5mm
PSQ 喷砂枪/PSQ Sand Blasting Gun: Φ4.5、Φ5、Φ5.5、Φ6.5mm

PSQ 喷砂枪/PSQ Sand Blasting Gun

特点 / FEATURES

- 产品技术先进,设计合理,外形美观,手握感舒适,操作方便
- 枪体和喷砂管由铝合金压铸成形，重量轻
- 喷嘴材料为陶瓷,耐磨性能好,使用寿命长
- This product is advanced in technology and reasonable in design.It has comfortable hold feel and easy operation
- The gun and sand blasting pipe are die-cast by aluminum alloy and are very light
- The spray port is made of ceramics , which has fine abrasive resistance and long service life



PQP 喷气枪 /PQQ Air Gun

作用 / APPLICATIONS

本产品用于吹净零件内、外表面、机床或工作台上的切屑、灰尘及其它杂质，
特别适用于机加工和装配等场所

This product is used to blow off the metal chips left insidethe parts, external surfaces, machine tools or operatingplatforms as well as dusts and other foreign substances
It is especially suitable for the occasions of machiningand assernbly



特点 / FEATURES

产品技术先进，设计合理，外形美观，手握感舒适，操作方便；枪体由铝合金压铸成形，重量轻；喷气嘴由铜合金加工而成，比其它材料的喷气枪坚固耐用

This product is advanced in technology and reasonable in design. It has comfortable hold feel and easy operation.The gun are die-cast by aluminum alloy and are very light. Made of aluminum alloy and formed through die-casting,the gun is quite light.The air nozzle is made of copper alloy,which makes the gun stronger and more durable than those made of other materials



订购号 / Order

IVH 07 – 06 01 □ □ – □

型号
Model
IVU：直通型
Straight Type
IVH：螺纹直角型
Thread right angle type
IVS：螺纹直角万向型
Thread right angle universal type

喷嘴直径
Nozzle Diameter
05：Φ0.5
07：Φ0.7
10：Φ1.0
15：Φ1.5
20：Φ2.0

真空端尺寸
Vacuum Connection Size
04：Φ4　M5：M5X0.8
06：Φ6　M6：M6X1
08：Φ8

空气输入端口尺寸
Air Connection Size
M5：M5X0.8
M6：M6X1
01：R1/8
02：R1/4
(Ellipsis as in Vacuum Connection Size)

达到真空压力
Reach The Vacuum Pressure
空白：-90Kpa(压力型)
Blank：-90Kpa(Pressure type)
L：-53Kpa(流量型/Flow type)

排气端口
Exhaust Port
空白：消声排气型
Blank：Silencing Exhaust
J：集中排气型
J：Centralized exhaust type

塑料帽颜色
Color
A：灰色/Grey
BK：黑色/Black

特点 / Features

- 利用压缩空气形成真空的真空发生器
- 新型、高效、清洁、经济的真空元器件
- 产品体积小、真空度高、安装维修方便、可靠性好等优点

- Vacuum generator using compressed air to form vacuum
- New, efficient, clean and economical vacuum components
- The product has the advantages of small volume, high vacuum degree, convenient installation and maintenance, good reliability, etc

结构图 / Structure Chart

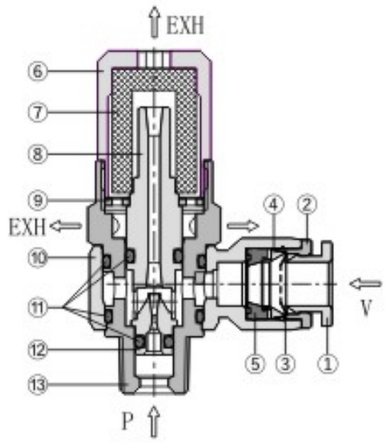

技术参数 / Specifications

使用流体/Fluid	空气/Air
使用压力范围/Operating Pressure	0.15~0.7MPa
标准供气压力/Standard Supply Pressure	0.5Mpa
使用环境及流体温度/Operating Temperature	0~60℃（32~140°F）
适用软管/Applicable Tube	PU及尼龙管/Polyurethane and Nylon

序号	名称	材质
1	按钮(Sleeve)	聚甲醛(POM)
2	锌套(Collar)	锌合金(ZINC)
3	簧片(Lock Claws)	不锈钢(SUS)
4	压环(Back Ring)	聚甲醛(POM)
5	密封圈(Packing)	丁腈橡胶(NBR)
6	帽(Cap)	铝合金(6061)
7	消声元(Silencer)	聚乙烯甲缩醛(PE)
8	扩压器(Diffuser Tube)	镀镍铜(Brass)
9	垫片(Washer)	不锈钢(SUS)
10	塑料体(Resin Body)	聚对苯二甲酸丁二醇脂(PBT)
11	O型圈(O-Ring)	丁腈橡胶(NBR)
12	喷嘴(Spray Nozzle)	镀镍铜(Brass)
13	铜体(Metal Body)	镀镍铜(Brass)

备注：建议调节压力范围：4~5bar



型号 Model	喷嘴直径 Nozzle Diameter (mm)	管径 Tube Outer Diamete mm(V)	螺纹 Thread (P)	达到真空度 Vacuum pressure (-KPa)	最大吸入流量 Max intake flow L/min(ANR)
IVH07-0601	0.7	6	R1/8	89	12
IVH07-0801	0.7	8			12
IVH10-0601	1.0	6			28
IVH10-0801	1.0	8			28



型号 Model	喷嘴直径 Nozzle Diameter (mm)	管径 Tube Outer Diamete mm(V)	螺纹 Thread (P)	达到真空度 Vacuum pressure (-KPa)	最大吸入流量 Max intake flow L/min(ANR)
IVH07-0601J	0.7	6	R1/8	89	12
IVH07-0801J	0.7	8			12
IVH10-0601J	1.0	6			28
IVH10-0801J	1.0	8			28



型号 Model	喷嘴直径 Nozzle Diameter (mm)	管径 Tube Outer Diamete mm(V)	螺纹 Thread (P)	达到真空度 Vacuum pressure (-KPa)	最大吸入流量 Max intake flow L/min(ANR)
IVS07-0601	0.7	6	R1/8	89	12
IVS07-0801	0.7	8			12
IVS10-0601	1.0	6			28
IVS10-0801	1.0	8			28



型号 Model	喷嘴直径mm Nozzle Diameter	管径mm(V) Tube Outer Diamete	管径mm(P) Tube Outer Diamete	达到真空度-KPa Vacuum pressure	最大吸入流量L/min(ANR) Max intake flow
IVU05-06	0.5	6	6	85	7
IVU05-06L	0.5	6	6	53	8.5



订购号 / Order

IPZK2 A 10 K 5 A – 06 – B

主体排气形式
Main Exhaust type
A：内置消音器排气
Internal Silencer Exhaust
B：通口排气
Port Exhaust
G：外置消音器排气
External Silencer Exhaust

喷嘴直径
Nominal nozzle size
07：Φ0.7
10：Φ1.0
12：Φ1.2
15：Φ1.5

供给阀破坏阀组合
Combination of supply valve and release valve
K
J
R

真空压力开关压力传感器（KP92）
Pressure switch for vacuum & Pressure sensor
A P
C T
E N
H

供给阀破坏阀额定电压
Rated voltage (Supply valve/Release valve)
5：DC24V

真空(V)通口
Vacuum (V) port
06：Φ6
08：Φ8

配件
Accessories
B：单体安装用托架（螺栓螺母)同包
Mounting bracket for single unit (nuts and bolts are included)
W：带止回阀(请在真空配管中途设置破坏阀或大气导入阀)
Equipped with a check valve (please install a release valve or atmospheric inlet valve in the middle of the vacuum piping)

供给阀/破坏阀(Supply valve/Release valve)

代号/Code	空白/Blank	K	J	R
供给阀/Supply valve	无阀类/No Valve	N.C.	N.C.	自我保持型/Self-holding
破坏阀/Release valve		N.C.	-	N.C.

通用规格/General Specifications

使用温度范围(未结露)/Ambient temp.range(No condensation)	5~50℃
使用流体/Fluids	洁净空气/Clean Air

真空过滤器规格/Vacuum Filter Specifications

过滤精度/Filter Fineness	40μm
过滤面积/Filter area	700mm²

真空压力开关/Vacuum pressure switch、压力传感器/Pressure sensor (KP92)

代号/Code	A	C	E	H	P	T	N
种类/Type	真空压力开关/Vacuum pressure switch				压力传感器/Pressure sensor		无真空压力开关、压力传感器/Without Vacuum pressure switch or Pressure sensor
压力范围(Kpa)/Pressure range[kPa]	-100~0		-100~100		-101~0	-100~100	
规格(2输出)/Specifications(2 outputs)	NPN	PNP	NPN	PNP	模拟输出/Analog Output 1~5V		

电磁阀规格/Specification of Solenoid Valve

切换方式/Switching method	供给阀/Supply valve：N.C.　破坏阀/Release valve：N.C.			
阀构成/Component part	先导式2位3通/Control Two-position Three-Way			
使用压力范围/Operating pressure range	0.3~0.7MPa			
阀结构/Structure	座阀式/Poppet seal			
手动操作/Operation	推压式/Push type			
额定电压/Rated Voltage	DC24V			
消耗功率/Power consumption	1.2W			
导线/Lead wire type	导体截面积/Cross-sectional area of conductor：0.2mm²			
	绝缘体外径/Insulator OD：1.4mm			
供给阀、破坏阀导线颜色 Color of wires for supply valve and release valve	供给阀/Supply valve VAC	-黑色/Black	破坏阀/Release valve Blow	-白色/White
		+红色/Red		+红色/Red

噪声值(参考值)/Noiseleve(Reference Value)

项目/Item \ 型号/Model		IPZK2□07	IPZK2□10	IPZK2□12	IPZK2□15
噪声值/Noiseleve[dB(A)]	PZKG(高效消音型消声器排气 /High-noise reduction silencer exhaust)	46	55	63	69
	PZKA(消声器排气/Silencer exhaust)	59	66	75	76

注：本公司测定条件下的实测值(不是保证值)
Note: The measured values under the conditions determined by our company (not guaranteed values)

真空发生器规格/Compact Vacuum Unit Specifications

项目/Item \ 型号/Model			IPZK2□ 07	IPZK2□ 10	IPZK2□ 12	IPZK2□ 15
喷嘴口径/Nozzle diameter		[mm]	0.7	1.0	1.2	1.5
吸入流量 /Suction flow	通口排气/Port exhaust	[L/min(ANR)]	34	56	74	89
	内置消音器排气/复合排气 Internal Silencer Exhaust/Complex exhaust	[L/min(ANR)]	29	44	61	67
	外置消音器排气/External Silencer Exhaust	[L/min(ANR)]	34	56	72	83
空气消耗量/Air consumption		[L/min(ANR)]	24	40	58	90
真空度/Vacuum level		[KPa]	-80	-91		
供给压力范围/Rated air supply pressure		[MPa]	0.3~0.6(无阀类场合/Non valve occasions0.1~0.6)			
供给压力/Air supply pressure		[MPa]	0.35~0.45			0.4~0.5

注：表内空气消耗量与真空度均为标准供给压力时的值。本公司测定条件下的值随大气压(天气、海拔等)和测定方法的变化而变化。

Note: The air consumption and vacuum degree in the table are both values at standard supply pressure. The values measured by our company vary with changes in atmospheric pressure (weather, altitude, etc.) and measurement methods.

压力传感器规格

规格表		KP93(节能型/Energy-saving)	KP92V-(负压/Negative pressure)	KP92C-(正负压/Positive and negative pressure)
压力范围/Pressure Range		-100~100KPa	-101~0KPa	-100~100KPa
设定压力范围/Setting Pressure Range		-105~105KPa	-100~10KPa	-105~105KPa
耐压力/Pressure Resistance		500KPa		
通用气体/General Gas		空气、非腐蚀性、不可燃性/Air,Non-corrosive,non flammable gas		
电源电压/Power Supply Voltage		12 to 24V DC±10%,波峰值(P-P)10%以下/12 to 24V DC±10%,RIPPLE(P-P)10% or less		
消耗电流/Current Consumption		≤40mA(无负载时)/≤40mA(Without load)		
最小刻度值 /Pressureunit Set pressure resolution	kPa	0. 1		
	kgf/cm²	0. 001		
	bar	0. 001		
	psi	0. 01		
	inHg	0. 1		
	mmHg	1		
开关输出 /Switch Output	输出模式/Output Mode	NPN或PNP/NPN or PNP	2NPN或2PNP/2NPN or 2PNP	
	最大负载电流/Max. Load Current	125mA		
	最大供应电压/Max. Supply Voltage	24V DC		
	内部压降/Residual Voltage	≤1.5V		
响应时间/Response time		≤2.5ms(预防误动作功能：25ms,100ms,250ms,1000ms,和1500ms可选择)/ ≤2.5ms(chattering-proof function:25ms,100ms,250ms,1000ms,1500ms selectable)		
输出短路保护/Output Short Circuit Protection		有/Yes		
显示模式/Display		3 1/2 位LED 7段显示(灯)/ 3 1/2 LED 7 segment display(Red)display(Sampling rate:5 times/sec)		
动作显示灯/Switch ON Indicator		OUT1绿色/OUT2红色 OUT1:Green/OUT2:Red		
显示精度/Indicator Accuracy		±2%F.S. ±1 digit(在周围温度：25±3℃)/ ±2%F.S. ±1 digit(at temperature range of 25±3℃)		
重复精度/Repeatability		±2%F.S. ±1digit		
耐环境 /Environmental resistance	防护等级/IP Grade	IP40		
	使用温度范围/Ambient temp.range	动作：0~50℃/Operation:0~50℃		
	耐电压/Withstand Voltage	1000V AC 1分钟(引线及塑料外壳间)/1000V AC in iminute (between case and lead wire)		
	绝缘阻抗/Insulation Resistance	50MΩ以上(500V DC)(引线及塑料外壳间)/50MΩ min. (at 500V DC,between case and lead wire)		
温度特性/Temperature Characteristic		±2%F.S. (0~50℃温度范围内)/±2%F.S. (at temperature range of 0~50℃)		
电线规格/Lead Wire		耐油PVC电线(0.15mm²)/Oil proof PVC cable(0.15mm²)		
重量/Weight		约55g(包含2公尺的电线)/=55g (with 2 meters lead wire)		



订购号 / Order

IVBM5 — B — N — V

型号：容量
Model:Capacity
IVBM5：0.05KW
IVBM10：0.10KW
IVBM20：0.20KW
IVBM30：0.30KW
注：容量等同于电力泵规格
Note: The capacity is equivalent to the specifications of the electric pump

供气口，真空口，排气口
Air supply port、Vacuum port、Exhaust port
A　NB
NA　NAB
B　C
AB　NC

单向阀
Check Valves
无记号：基本型
Unmarked：Basic type
N：带单向阀
N：With Check Valves

密封件
Sealing Element
无记号/：标准
Unmarked: Standard（丁腈橡胶/NBR）
V：氟橡胶/FKM
E：三元乙丙橡胶/EPDM

供气口，真空口，排气口/Air supply port、Vacuum port、Exhaust port			
	供气/Air supply port	真空/Vacuum port	排气/Exhaust port
A	M5-Φ6	G1/8"	通口排气/Port exhaust
NA	M5-Φ6	NPSF1/8"	通口排气/Port exhaust
B	G1/8"	G3/8"	内置消声器/Internal silencer
AB	G1/8"	G3/8"	内置消声器/Internal silencer
			连接板-铝/Connecting Plate - Aluminum
NB	NPSF1/8"	NPSF3/8"	内置消声器/Internal silencer
NAB	NPSF1/8"	NPSF3/8"	内置消声器/Internal silencer
			连接板-铝/Connecting Plate - Aluminum
C	G1/8"	G3/8"	外置消声器/External silencer
NC	NPSF1/8"	NPSF3/8"	外置消声器/External silencer

IVBM系列迷你多级真空发生器
IVBM Series Mini Multistage Vacuum Generator
ISAIAH

技术参数 / Specifications

最大真空度/Max.vacuum level	-85kPa
最大真空流量/Max.vacuum flow	220l/m
供气压力/Rated air supply pressure	1~6bar
最佳供气压力/The best rated air supply pressure	4.5~6bar
供气类别/Supply Category	干燥的压缩空气/Dry compressed air
工作温度/Operating temperature	-20℃~+80℃
噪音/Noise	52~65dB

产品参数 / Product parameters

型号 MODEL	供气压力 Rated air supply pressure bar	最大真空度 Max.vacuum level (-kPa)	最大真空流量 Max.vacuum flow (l/min)	空气消耗量 Air consumption (l/min)	噪音 Noise level (dBA)	最小软管内径中(管长2m内) Minimum inner diameter of hose Φ (within 2m)		
						供气 Air supply port	真空 Vacuum port	排气 Exhaust port
IVBM5	4.5~6	85	35~37	45-47	50-65	>2	>5	>8
IVBM10			70~76	28-43	55-68	>2	>8	>10
IVBM20			141~152	55-86	60-68	>4	>10	>12
IVBM30	5~6		175~221	87-123	60-68	>6	>12	>15

型号/MODEL

通口排气/Port exhaust	IVBM5-A	IVBM10-A	IVBM20-A	IVBM30-A
内置消声器/Internal silencer	IVBM5-B	IVBM10-B	IVBM20-B	IVBM30-B
外置消声器/External silencer	IVBM5-C	IVBM10-C	IVBM20-C	IVBM30-C



订购号 / Order

IVM 40 – 2 B □ □ – A – D

- 型号 MODEL
- 真空发生器 Vacuum Generator
  - 40：真空流量型(4.5bar) High vacuum level type
  - 32：标准型(6.0bar) Universal type
  - 48：低压供气型(3.5bar) Low pressure air supply type
- 单元数量 Unit
  - 1：1个　4：4个
  - 2：2个　5：5个
  - 3：3个　6：6个
- 阀配置 Valve configuration
  - B：标准/Standard
  - A：止回阀/Check valve
- 密封材料 Sealing
  - 空：丁腈橡胶/NBR
  - V：氟橡胶/FKM
- 功能 Function
  - 空：无功能 Nil - Default, without control device
  - F：节能系统(ES) F：Energy saving system (ES)
- 压缩空气连接件 Connection plate
  - A：G1/4"内螺纹 G1/4 "female thread
  - E：1/4"NPT内螺纹(定制) 1/4 "NPT female thread (customized)
  - D：1/8"NPSF内螺纹(定制) 1/8 "NPSF female thread (customized)
- 真空连接件、排气口 Vacuum Connectors, Exhaust Ports
  - D：3/4"内螺纹 3/4 "female thread
  - E：3/4"NPT内螺纹(定制) 3/4 "NPT female thread (customized)
  - B：G1"内螺纹(5单元与6单元) G1 "female thread(5 units and 6 units)

型号/MODEL

供气压力低型/Air Supply Pressure	IVM481 B-A-D	IVM482 B-A-D	IVM483 B-A-D	IVM484 B-A-D	IVM485 B-A-B	IVM486 B-A-B
大流量型/Large Flow	IVM321 B-A-D	IVM322 B-A-D	IVM323 B-A-D	IVM324 B-A-D	IVM325 B-A-B	IVM326 B-A-B
常用高真空型/High vacuum level type	IVM401 B-A-D	IVM402 B-A-D	IVM403 B-A-D	IVM404 B-A-D	IVM405 B-A-B	IVM406 B-A-B

技术参数 / Specifications

最大供气压力/Max. Rated air supply pressure	7bar
48最大供气压力/48 Max. Rated air supply pressure	3.5bar
40最大供气压力/40 Max. Rated air supply pressure	4.5bar
32最大供气压力/32 Max. Rated air supply pressure	6bar
噪音/Noise level	55~63dB
温度范围/Ambient temp.range	-20~80℃

IVM40标准型/Standard Type

产品参数(供气压力4.5bar)

型号 Model	最大真空度 Max.vacuum level (-kPa)	最大真空流量 Max.vacuum flow (l/min)	空气消耗量 Air consumption (l/min)	重量(PA材料) Weight(PA) g	最小软管内径中(管长2m内) Minimum inner diameter of hose Φ (within 2m)		
					供气 Air supply port	真空 Vacuum port	排气 Exhaust port
IVM401	90	354	110	687	>6	>12	>12
IVM402		708	220	695	>6	>15	>15
IVM403		1062	330	845	>8	>19	>22
IVM404		1400	440	862	>8	>19	>22
IVM405		1500	550	1091	>10	>25	>32
IVM406		1680	660	1105	>10	>25	>32

IVM32流量型/Flow Type

产品参数(供气压力6.0bar)

型号 Model	最大真空度 Max.vacuum level (-kPa)	最大真空流量 Max.vacuum flow (l/min)	空气消耗量 Air consumption (l/min)	重量(PA材料) Weight(PA) g	最小软管内径中(管长2m内) Minimum inner diameter of hose Φ (within 2m)		
					供气 Air supply port	真空 Vacuum port	排气 Exhaust port
IVM321	75	360	105	687	>6	>12	>12
IVM322		720	210	695	>6	>15	>15
IVM323		1080	315	845	>8	>19	>22
IVM324		1440	470	862	>8	>19	>22
IVM325		1530	525	1091	>10	>25	>32
IVM326		1728	630	1105	>10	>25	>32

IVM48低压供气型/Air Supply pressure

产品参数(供气压力3.5bar)

型号 Model	最大真空度 Max.vacuum level (-kPa)	最大真空流量 Max.vacuum flow (l/min)	空气消耗量 Air consumption (l/min)	重量(PA材料) Weight(PA) g	最小软管内径中(管长2m内) Minimum inner diameter of hose Φ (within 2m)		
					供气 Air supply port	真空 Vacuum port	排气 Exhaust port
IVM481	90	336	120	687	>6	>12	>12
IVM482		672	240	695	>6	>15	>15
IVM483		1008	360	845	>8	>19	>22
IVM484		1334	480	862	>8	>19	>22
IVM485		1428	600	1091	>10	>25	>32
IVM486		1614	720	1105	>10	>25	>32

订购号 / Order



IVFD — 2 — 06

型号/Model

过滤面积/Filter area

代号/Code	1	2	3	4
过滤面积/Filter area	5mm²	7.5mm²	12.5mm²	15mm²

管径/Tube Outer Diameter

	公制/Metric Size				
代号/Code	04	06	08	10	12
气管外径O.D	4	6	8	10	12

技术参数 / Specifications

型号/Model	IVFD01	IVFD02	IVFD03	IVFD04
管径/Tube diameter	Φ4	Φ4,Φ6	Φ6,Φ8,Φ10	Φ10,Φ12
过滤面积/Filter area	5	7.5	12.5	15
流体/Fluid	空气/Air			
最高工作压力/Max Working Pressure	-1(-100)Kgf/cm²(Kpa)			
过滤精度/Filtration Rating	10μm)			
使用温度范围/Operating Temperature	0~60℃			

订购号 / Order



IVFJ — 06

型号/Model

管径/Tube Outer Diameter

	公制/Metric Size	
代号/Code	04	06
气管外径O.D	4	6





订购号 / Order

INP — 01 C 001 M T

型号
MODEL

系列/Series

00	经济系列/Economic Series
01	耐管道水汽/Resistance to Pipeline Moisture
05	可测纯水/Pure Water Measurement

气压输入类型
Air Pressure Input Type

P	高压型/High Pressure Type (-0.1-1MPa)
C	低压型/Low Pressure Type(-100-100kPa)

输出规格
Output Specifications

001	2NPN
002	2PNP
003	1NPN+1PNP
010	2NPN+1(1-5V)
011	2NPN+1(4-20mA)
012	1NPN+1PNP+1(1-5V)
020	2PNP+1(1-5V)
021	2PNP+1(4-20mA)
030	1NPN+1RS485
031	1PNP+1RS485

安装附件（需另选购）
Install Accessories
(Purchased Separately)

T	无安装支架/No Installation Bracket

另选购配件型号/Optional Accessory Model

XP-MR-01: 转换接头1/8 XP-MR-01: Adapter 1/8
XP-MR-02: 转换接头1/4 XP-MR-02: Adapter 1/4
XP-BT-01: L型金属安装支架 XP-BT-01: L-Shaped Metal Installation Bracket
XP-PA-01: 面板安装支架 (含保护罩、固定件、卡扣件) XP-PA-01: Panel Installation Bracket(including Protective Cover, Fixing Parts, Clips)

气压接口类型
Air Pressure Interface Type

M	M5内螺纹/M5 Internal Thread



订购号 / Order

ITV 2 0 5 – 3 1 2 B S

型号 MODEL

形式/Form

1	100
2	200
3	300

电源电压 Voltage

0	DC24V

压力范围 Pressure Range

1	0. 1MPa（1. 0kgf/cm）
3	0. 5MPa（5. 1kgf/cm）
5	0. 9MPa（9. 2kgf/cm）

输入信号 Input Signal

0	电流型/Current 4-20MA
1	电流型/Current 0-20MA
2	电压型/VoltageDC 0-5V
3	电压型/VoltageDC 0-10V
40	4点预置输入/4 Point Preset Input
RS	RS485

监控输出 Monitoring Output

1	DC1-5V
2	NPN
3	PNP
4	DC4-20MA
无记号 No symbol	空白/Blank

电缆接头的种类 Types of cable joints

N	N不带线/Deadwirei
S	S直线型(2m)/ Linearform(2m)
L	L直角型((2m)/ Rectangular type(2m)

附件（托架） Attachment (Bracket)

空白/Blank	无托架/No
B	平板型托架 /Flat plate bracket
C	L型托架/L-bracket

链接口径 Link Caliber

1	PT1/8(100形式/forms)
G1	G1/8(100形式/forms)
2	PT1/4(100、200、300形式/forms)
G2	G1/4(100、200、300形式/forms)
3	PT3/8(200、300形式/forms)
G3	G3/8(200、300形式/forms)
4	PT1/2(300形式/forms)
G4	G1/2(300形式/forms)

SE 系列气缸
SE Series cylinder



订购号 / Order

SE 63 × 50 – S – LB – CS1M2
SED 63 × 50 – S – LB – CS1M2
SEJ 63 × 50 – 20 – S – LB – CS1M2

规格代码 Specification number
SE:标准复动型 Standard double action
SED:双轴复动型 Double-shaft double action
SEJ：双轴复动行程可调型 Double shaft double action adjustable stroke

缸径 Bore
32 40 50 63 80 100 125

行程 Stroke
详见行程列表 Details as shown in the stroke list

可调行程 Adjustable stroke
10: 10mm
20: 20mm
30: 30mm
40: 40mm
50: 50mm
75: 75mm
100: 100mm

固定形式 Accessories

空白 Blank	基本型 Basic type
LB	
FA/ FB	
CA	
CB	
CR	

磁石代号 Magnet code
空白：不附磁石 Blank:without magent
S：附磁石 S:magent

磁感应开关 Magnetic switch

空白: 不带磁感应开关 Blank:Without magnetic switch	
CS1M	

注：CS1M1-带1个感应开关 CS1M2-带2个感应开关
Note:CS1M1-with one magnetic switch CS1M2-with two magnetic switch
标准线长1米，特殊另购 The standard length is 1 meter another special purchase

SI 系列气缸
SI Series cylinder


SI 63×80


SID 63×75


SIJ 63×75-20

订购号 / Order

SI	63	×	50		—		S	—	LB	—	CS1U2
SID	63	×	50		—		S	—	LB	—	CS1U2
SIJ	63	×	50	—	20	—	S	—	LB	—	CS1U2

规格代码
Specification number
SI:标准复动型
Standard double action
SID:双轴复动型
Double-shaft double action
SIJ：双轴复动行程可调型
Double shaft double action adjustable stroke

缸径
Bore
32 40 50 63 80 100 125 160 200 250 320

行程
Stroke
详见行程列表
Details as shown in the stroke list

可调行程
Adjustable stroke
10: 10mm
20: 20mm
30: 30mm
40: 40mm
50: 50mm
75: 75mm
100: 100mm

固定形式
Accessories

空白 Blank	基本型 Basic type
LB	
FA/FB	
CA	
CB	
CR	

磁石代号
Magnet code
空白：不附磁石
Blank:without magent
S：附磁石
S:magent

磁感应开关
Magnetic switch

空白: 不带磁感应开关 Blank:Without magnetic switch
CS1U 
CS1F 

注：CS1U1-带1个感应开关
CS1U2-带2个感应开关
Note:CS1U1-with one magnetic switch
CS1U2-with two magnetic switch
标准线长1米，特殊另购
The standard length is 1 meter another special purchase

安装支架 Installation bracket


SC 系列气缸
SC Series cylinder


SC 50×75


SCD 63×75


SCJ 63×75-20

订购号 / Order

SC	63	×	50		—		S	—	LB	—	CS1U2
SCD	63	×	50		—		S	—	LB	—	CS1U2
SCJ	63	×	50	—	20	—	S	—	LB	—	CS1U2

规格代码
Specification number
SC:标准复动型
Standard double action
SCD:双轴复动型
Double-shaft double action
SCJ：双轴复动行程可调型
Double shaft double action adjustable stroke

缸径
Bore
32 40 50 63 80 100

行程
Stroke
详见行程列表
Details as shown in the stroke list

可调行程
Adjustable stroke
10: 10mm
20: 20mm
30: 30mm
40: 40mm
50: 50mm
75: 75mm
100: 100mm

固定形式
Accessories

空白 Blank	基本型 Basic type
LB	
FA/FB	
CA	
CB	
TC	
TF	

磁石代号
Magnet code
空白：不附磁石
Blank:without magent
S：附磁石
S:magent

磁感应开关
Magnetic switch

空白: 不带磁感应开关 Blank:Without magnetic switch
CS1U 
CS1F 

注：CS1U1-带1个感应开关
CS1U2-带2个感应开关
Note:CS1U1-with one magnetic switch
CS1U2-with two magnetic switch
标准线长1米，特殊另购
The standard length is 1 meter another special purchase

安装支架 Installation bracket


SU 系列气缸
SU Series cylinder



订购号 / Order

SU	63	×	50		—	S	—	LB	—	CS1U2
SUD	63	×	50		—	S	—	LB	—	CS1U2
SUJ	63	×	50	—	20	S	—	LB	—	CS1U2

规格代码
Specification number
SU:标准复动型
Standard double action
SUD:双轴复动型
Double-shaft double action
SUJ：双轴复动行程可调型
Double shaft double action adjustable stroke

缸径
Bore
32 40 50 63 80 100

行程
Stroke
详见行程列表
Details as shown in the stroke list

可调行程
Adjustable stroke
10: 10mm
20: 20mm
30: 30mm
40: 40mm
50: 50mm
75: 75mm
100: 100mm

固定形式
Accessories

空白 Blank	基本型 Basic type
LB	
FA/FB	
CA	
CB	

磁石代号
Magnet code
空白：不附磁石
Blank:without magent
S：附磁石
S:magent

磁感应开关
Magnetic switch

空白: 不带磁感应开关 Blank:Without magnetic switch
CS1U 
CS1F 

注：CS1U1-带1个感应开关
CS1U2-带2个感应开关
Note:CS1U1-with one magnetic switch
CS1U2-with two magnetic switch
标准线长1米，特殊另购
The standard length is 1 meter another special purchase

安装支架 Installation bracket


MI 系列不锈钢迷你气缸
MI Series stainless steel mini cylinder



订购号 / Order

MI	10	×	50		—	S	—	CA	—	CS1S2
MID	10	×	50		—	S		—		CS1S2
MIJ	10	×	50	—	20	S		—		CS1S2

规格代码
Specification number
MI:迷你气缸（复动型）
Mini Cylinder(Double action)
MSI:迷你气缸（单动押出型）
Mini Cylinder(Single action push)
MTI：迷你气缸（单动引入型）
Mini Cylinder(Single action pull)
MID：迷你气缸（双轴复动型）
Mini Cylinder(Double shaft double action)
MIJ：迷你气缸（双轴复动行程可调）
Mini Cylinder(Double shaft double action adjustable)
MIC：迷你气缸（复动可调缓冲型）
Mini Cylinder(Double action adjustable cushion)
MICD：迷你气缸（双轴复动缓冲型）
Mini Cylinder(Double shaft double action cushion)
MICJ：迷你气缸（双轴复动行程可调缓冲型）
Mini Cylinder(Double shaft double action adjustable cushion)

缸径
Bore
10 12 16 20 25

行程
Stroke
详见行程列表
Details as shown in the stroke list

后盖形式
Back cover type

规格 Code	后盖型式 Back cover type
MI MSI MTI	CA:摆尾型 CA:Pivot type
	U:平尾型 U:Perpendicular 90°
	CM:圆尾型 CM:Round-end type
	R:轴向进气型 R:Axial air-in
MIC	CA:摆尾型 CA:Pivot type
	U:平尾型 U:Perpendicular 90°
	CM:圆尾型 CM:Round-end type

磁石代号
Magnet code
空白：不附磁石
Blank:without magent
S：附磁石
S:magent

可调行程
Adjustable stroke
10: 10mm
20: 20mm
30: 30mm
40: 40mm
50: 50mm
75: 75mm
100: 100mm

注：缸径10/12无可调缓冲型
Note:Bore 10/12 without ajustable cushion

磁感应开关
Magnetic switch

空白: 不带磁感应开关 Blank:Without magnetic switch
CS1S 

注：CS1S1-带1个感应开关
CS1S2-带2个感应开关
Note:CS1S1-with one magnetic switch
CS1S2-with two magnetic switch
标准线长1米，特殊另购
The standard length is 1 meter another special purchase

圆绑带 Fixing strap


PB 笔形气缸
PB Pen cylinder



订购号 / Order

PB	10	×	30		—	S	—	CB	—	CS1S2
PBD	10	×	30		—	S	—	—	—	CS1S2
PBJ	10	×	30	—	10	S	—	—	—	CS1S2

规格代码
Specification number
PB：笔形气缸（复动型）
Pen Cylinder(Double action)
PSB：笔形气缸（单动押出型）
Pen Cylinder(Single action push)
PTB：笔形气缸（单动引入型）
Pen Cylinder(Single action pull)
PBD：笔形气缸（双轴复动型）
Pen Cylinder(Double shaft double action)
PBJ：笔形气缸（双轴复动行程可调型）
Pen Cylinder((Double shaft double action adjustable)

缸径
Bore
6 10 12 16

行程
Stroke
详见行程列表
Details as shown in the stroke list

可调行程
Adjustable stroke
10：10mm
20：20mm
30：30mm
40：40mm
50：50mm
75：75mm

后盖形式
Back cover type

规格 Code	后盖型式 Back cover type
PB PSB PTB	CB:双耳环型 CB:Double type
	U:径向进气型 U:Perpendicular(90°) air-in
	R:轴向进气型 R:Axial air-in

磁感应开关
Magnetic switch

空白: 不带磁感应开关 Blank:Without magnetic switch
CS1S

注：CS1S1-带1个感应开关
CS1S2-带2个感应开关
Note:CS1S1-with one magnetic switch
CS1S2-with two magnetic switch
标准线长1米，特殊另购
The standard length is 1 meter another special purchase
固定带 Fixing strap

磁石代号
Magnet code
空白：不附磁石
Blank:without magent
S：附磁石
S:magent

MA 系列不锈钢迷你气缸
MA Series stainless steel mini cylinder



订购号 / Order

MA	25	×	50		—	S	—	CM	—	LB	—	CS1S2
MAD	25	×	50		—	S		—		LB	—	CS1S2
MAJ	25	×	50	—	20	S		—		LB	—	CS1S2

规格代码
Specification number
MA：不锈钢迷你气缸（复动型）
Stainless steel Mini Cylinder(Double action)
MSA：不锈钢迷你气缸（单动押出型）
Stainless steel Mini Cylinder(Single action push)
MTA：不锈钢迷你气缸（单动引入型）
Stainless steel Mini Cylinder(Single action pull)
MAD：不锈钢迷你气缸（双轴复动型）
Stainless steel Mini Cylinder(Double shaft double action)
MAJ：不锈钢迷你气缸（双轴复动行程可调型）
Stainless steel Mini Cylinder(Double shaft double action adjustable)
MAC：不锈钢迷你气缸（复动可调缓冲型）
Stainless steel Mini Cylinder(doubleaction adjustable cushion)
MACD：不锈钢迷你气缸（双轴复动缓冲型）
Stainless steel Mini Cylinder(Double shaft double action cushion)
MACJ：不锈钢迷你气缸（双轴复动行程可调缓冲型）
Stainless steel Mini Cylinder(Double shaft double action adjustable cushion)

缸径
Bore

规格 Type	缸径 Bore
MA/MSA/MTA/MAD/MAJ	16 20 25 32 40
MAC/MACD/MACJ	20 25 32 40 50 63

行程
Stroke
详见行程列表
Details as shown in the stroke list

可调行程
Adjustable stroke
10：10mm
20：20mm
30：30mm
40：40mm
50：50mm
75：75mm
100：100mm

磁石代号
Magnet code
S：附磁石
S:magent

后盖形式
Back cover type

规格 Code	后盖型式 Back cover type
MA MAC MSA MTA	CA:摆尾型 CA:Pivot type
	U:平尾型 U:Perpendicular 90°
	CM:圆尾型 CM:Round-end type

磁感应开关
Magnetic switch

空白: 不带磁感应开关 Blank:Without magnetic switch
CS1S

注：CS1S1-带1个感应开关
CS1S2-带2个感应开关
Note:CS1S1-with one magnetic switch
CS1S2-with two magnetic switch
标准线长1米，特殊另购
The standard length is 1 meter another special purchase
固定带 Fixing strap

固定形式
Accessories

空白 Blank	基本型 Basic type
LB	
FA	
SDB	

MAL 系列铝合金迷你气缸
MAL Series aluminum alloy mini cylinder



订购号 / Order

MAL	25	×	50		—	S	—	CM	—	LB	—	CS1S2
MALD	25	×	50		—	S		—		LB	—	CS1S2
MALJ	25	×	50	—	20	—	S		—	LB	—	CS1S2

规格代码
Specification number

MAL：铝合金迷你气缸（复动型）
Aluminum alloy Mini Cylinder(Double action)
MSAL：铝合金迷你气缸（单动推出型）
Aluminum alloy Mini Cylinder(Single action push)
MTAL：铝合金迷你气缸（单动引入型）
Aluminum alloy Mini Cylinder(Single action pull)
MALD：铝合金迷你气缸（双轴复动型）
Aluminum alloy Mini Cylinder(Double shaft double action)
MALJ：铝合金迷你气缸（双轴复动行程可调型）
Aluminum alloy Mini Cylinder(Double shaft double action adjustable）

缸径
Bore
20 25 32 40

行程
Stroke
详见行程列表
Details as shown in the stroke list

可调行程
Adjustable stroke
10: 10mm
20: 20mm
30: 30mm
40: 40mm
50: 50mm
75: 75mm
100: 100mm

磁石代号
Magnet code
空白：不附磁石
Blank:without magnet
S：附磁石
S:magnet

后盖形式
Back cover type

规格 Code	后盖型式 Back cover type
MAL MSAL MTAL	CA:摆尾型 CA:Pivot type
	U:平尾型 U:Perpendicular 90°
	CM:圆尾型 CM:Round-end type

固定形式
Accessories

空白 Blank	基本型 Basic type
LB	
FA	
SDB	

磁感应开关
Magnetic switch

空白: 不带磁感应开关 Blank:Without magnetic switch
CS1S 

注：CS1S1-带1个感应开关
CS1S2-带2个感应开关
Note:CS1S1-with one magnetic switch
CS1S2-with two magnetic switch
标准线长1米，特殊另购
The standard length is 1 meter another special purchase

固定带 Fixing strap 

SDA 系列超薄气缸
SDA Series Thin cylinder



订购号 / Order

SDA	20	×	30		—	S	—	B	—	CS1J2		
SDAD	20	×	30		—	S	—	B	—	CS1J2		
SDAJ	20	×	30	—	20	—	S	—	B	—	CS1J2	

规格代码
Specification number

SDA：超薄气缸（复动型）
Thin Cylinder(Double action)
SSA：超薄气缸（单动押出型）
Thin Cylinder(Single action push)
STA：超薄气缸（单动引入型）
Thin Cylinder(Single action pull)
SDAD：超薄气缸（双轴复动型）
Thin Cylinder(Double shaft double action)
SDAJ：超薄气缸（双轴复动行程可调型）
Thin Cylinder(Double shaft double action adjustable）

缸径
Bore

SSA/STA	12 16 20 25 32 40 50 63
其它规格 Others stroke	12 16 20 25 32 40 50 63 80 100

行程
Stroke
详见行程列表
Details as shown in the stroke list

可调行程
Adjustable stroke
10: 10mm
20: 20mm
30: 30mm
40: 40mm
50: 50mm
75: 75mm
100: 100mm

活塞杆牙型
The thread of piston rod

空白：内牙型 Blank:Female thread
B:外牙型 B:Male thread
N:无牙型 N:No thread

磁感应开关
Magnetic switch

空白: 不带磁感应开关 Blank:Without magnetic switch
CS1J 

注：CS1J1-带1个感应开关
CS1J2-带2个感应开关
Note:CS1J1-with one magnetic switch
CS1J2-with two magnetic switch
标准线长1米，特殊另购
The standard length is 1 meter another special purchase

SDAT	20	×	30	—	10	—	S	—	B	—	CS1J2	

规格代码
Specification number

SDAT：超薄气缸（复动多位置型）
Thin Cylinder(Double action multi-positiontype）
SDAW：超薄气缸（双轴复动多位置型）
Thin Cylinder(Double shaft double action multi-positiontype）

缸径
Bore
12 16 20 25 32 40 50 63 80 100

第一行程
The fist stroke
详见行程列表
Details as shown in the stroke list

第二行程
The second stroke
详见行程列表
Details as shown in the stroke list

磁石代号
Magnet code
空白：不附磁石
Blank:without magent
S：附磁石
S:magent

活塞杆牙型
The thread of piston rod

空白：内牙型 Blank:Female thread
B:外牙型 B:Male thread
N:无牙型 N:No thread

磁感应开关
Magnetic switch

空白: 不带磁感应开关 Blank:Without magnetic switch
CS1J 

注：CS1J1-带1个感应开关
CS1J2-带2个感应开关
Note:CS1J1-with one magnetic switch
CS1J2-with two magnetic switch
标准线长1米，特殊另购
The standard length is 1 meter another special purchase

ICQ 系列超薄气缸
ICQ Series Thin cylinder



ICQD 40×65　ICQJ 40×65-30　ITQ 63×30　ICQ 63×50　ISQ 63×30

订购号 / Order

ICQ	20	×	30			S	—	B	—	CS1H2
ICQD	20	×	30		—	S	—	B	—	CS1H2
ICQJ	20	×	30	—	30	S	—	B	—	CS1H2

规格代码
Specification number
ICQ：超薄气缸（复动型）
Thin Cylinder(Double action)
ISQ：超薄气缸（单动押出型）
Thin Cylinder(Single action push)
ITQ：超薄气缸（单动引入型）
Thin Cylinder(Single action pull)
ICQD：超薄气缸（双轴复动型）
Thin Cylinder(Double shaft double action)
ICQJ：超薄气缸（双轴复动行程可调型）
Thin Cylinder(Double shaft double action adjustable)

缸径
Bore

ISQ	12 16 20 25 32 40 50 63
ITQ	
ICQD	12 16 20 25 32 40 50 63 80 100
ICQJ	

行程
Stroke
详见行程列表
Details as shown in the stroke list

可调行程
Adjustable stroke
10: 10mm
20: 20mm
30: 30mm
40: 40mm
50: 50mm
75: 75mm
100: 100mm

活塞杆牙型
The thread of piston rod

空白：内牙型 Blank:Female thread
B:外牙型 B:Male thread
N:无牙型 N:No thread

磁石代号
Magnet code
空白：不附磁石
Blank:without magent
S：附磁石
S:magent

磁感应开关
Magnetic switch

空白: 不带磁感应开关 Blank:Without magnetic switch
CS1H

注：CS1H1-带1个感应开关
CS1H2-带2个感应开关
Note:CS1H1-with one magnetic switch
CS1H2-with two magnetic switch

标准线长1米，特殊另购
The standard length is 1 meter
another special purchase

MD 系列气缸
Multi-mount cylinder-MD series



MD 10×10　MSD20×20　MTD20×20

订购号 / Order

MD	32	×	30			S	—	CS1H2
MDD	32	×	30		—	S	—	CS1H2
MDJ	32	×	30	—	30	S	—	CS1H2

规格代码
Specification number
MD：多固型气缸（复动型）
Multi-mount Cylinder(Double action)
MSD：多固型气缸（单动押出型）
Multi-mount Cylinder(Single action push)
MTD：多固型气缸（单动引入型）
Multi-mount Cylinder(Single action pull)
MDD：多固型气缸（双轴复动型）
Multi-mount Cylinder(Double shaft double action)
MDJ：多固型气缸（双轴复动行程可调型）
Multi-mount Cylinder(Double shaft double action adjustable)

缸径
Bore
6 10 16 20 25 32

行程
Stroke
详见行程列表
Details as shown in the stroke list

可调行程
Adjustable stroke
10: 10mm
20: 20mm
30: 30mm
40: 40mm
50: 50mm
75: 75mm
100: 100mm

磁石代号
Magnet code
空白：不附磁石
Blank:without magent
S：附磁石
S:magent

磁感应开关
Magnetic switch

空白: 不带磁感应开关 Blank:Without magnetic switch
CS1H

注：CS1H1-带1个感应开关
CS1H2-带2个感应开关
Note:CS1H1-with one magnetic switch
CS1H2-with two magnetic switch

标准线长1米，特殊另购
The standard length is 1 meter
another special purchase

TN 系列气缸
Twin-rod cylinder-TN series



订购号 / Order

TN 20 × 50 — S — CS1J2

- 规格代码 Specification number
  TN：双轴气缸（复动型）
  Twin-rod cylinder(double action)
- 缸径 Bore
  10 16 20 25 32
- 行程 Stroke
  详见行程列表
  Details as shown in the stroke list
- 磁石代号 Magnet code
  S：耐磁石
  S:magent
- 磁感应开关 Magnetic switch
  空白: 不带磁感应开关
  Blank:Without magnetic switch
  CS1J



注：CS1J1-带1个感应开关
CS1J2-带2个感应开关
Note:CS1J1-with one magnetic switch
CS1J2-with two magnetic switch
标准线长1米，特殊另购
The standard length is 1 meter another special purchase

ICY3B系列磁耦合式无杆气缸
ICY3B series Cylinder with Lock



订购号 / Order

ICY3B 25 × 300

- 系列号 Series
  基本型
  Basic type
- 缸径 Bore
  6 10 15 20 25 32 40 50 63
- 行程 Stroke

ICY3R系列磁耦合式无杆气缸/直接安装型
ICY3R series Magnetically Coupled Rodless Cylinder/Direct Mount Type



订购号 / Order

ICY3R G 25 × 250 N — Z73

- 规格代码 Specification number
  内置磁环直接安装型
  Direct mount type
- 接管方式 Piping type
  空白：两侧配管
  Blank：Standard type
  G：集中配管
  G：Centralized piping type
- 缸径 Bore
  6 10 15 20 25 32 40 50 63
- 行程 Stroke
- 导轨 Switch rail
  空白：带开关导轨
  Blank：With switch rail
  N：不带开关导轨
  N:Without switch rail
- 磁感应开关型号 Auto switch

ICY1S系列磁耦合式无杆气缸(滑块型/滑动轴承)
ICY1S series Magnetically Coupled Rodless Cylinder/Slider Type: Slide Bearing



订购号 / Order

ICY1S G 25 × 300 B — A93

- 规格代码 Specification number
  滑块型(滑动轴承)
  Slider type(Slide bearing type)
- 接管方式 Piping type
  空白：两侧配管
  Blank：Standard type
  G：集中配管
  G：Centralized piping type
- 缸径 Bore
  6 10 15 20 25 32 40
- 行程 Stroke
- 调整型式 Stopper type
  空白：带调程栓(2个)
  Blank：With Bumper bolt(2)
  B：带液压缓冲器(2个)
  B：With Shock absorber(2)
  BS：带液压缓冲器(1个)
  BS：With Shock absorber(1)
- 磁感应开关型号 Auto switch

ICY1L系列磁耦合式无杆气缸(滑块型/球轴承)
ICY1L Series Magnetically Coupled Rodless Cylinder/Slider Type: Ball Bushing Bearing



订购号 / Order

ICY1L — 25 × 300 B — A73

- ICY1L：规格代码 Specification number；滑块型/球轴型 Slider type(Ball bushing bearing)
- 25：缸径 Bore；6 10 15 20 25 32 40
- 300：行程 Stroke
- B：调整型式 Stopper type；空白：带调程栓(2个) Blank: With Bumper bolt(2)；B：带液压缓冲器(2个) B: With Shock absorber(2)；BS：带液压缓冲器(1个) BS: With Shock absorber(1)
- A73：磁感应开关型号 Auto switch

IMHZ2系列平行开闭型气爪
IMHZ2 Series Parallel Style Air Gripper



订购号 / Order

IMHZ2 — 20 D 1 — A93

- IMHZ2：规格代码 Specification number；基本型 Basic type
- 20：缸径 Bore；6 10 15 20 25 32 40
- D：动作方式 Action；D：双作用 D: Double acting；S：单作用(常开) S: Single acting (Normally open)；C：单作用(常闭) C: Single acting (Normally closed)
- 1：可选手指种类 Finger option；空白：基本型 Blank: Basic type；1：侧面螺孔安装 1: Side tappedmounting；2：开闭方向通孔安装 2: Through-holesin opening/closing direction；3：扁平手指型 3: Flat type fingers；N：窄型 N: Narrow type
- A93：磁感应开关型号 Auto switch

IMHC2系列支点开闭型气爪
Angular Style Air Gripper



订购号 / Order

IMHC2 — 20 D 2 — A93

- IMHC2：规格代码 Specification number；支点开关型 Angular type air gripper
- 20：缸径 Bore；6 10 15 20 25 32
- D：动作方式 Action；D：双作用 D: Double acting；S：单作用(常开) S: Single acting (Normally open)；C：单作用(常闭) C: Single acting (Normally closed)
- 2：手指种类 Finger option；空白：基本型 Blank: Basic type；2：开闭方向通孔安装 2: Through-holesin opening/closing direction
- A93：磁感应开关型号 Auto switch

IMHL2系列平行开闭型气爪/宽型
IMHL2 Series Parallel Style Air Gripper: Wide Type



订购号 / Order

IMHL2 — 16 D 1 — A93

- IMHL2：规格代码 Specification number；平行开闭型 Parallel Type
- 16：缸径 Bore；10 16 20
- D：动作方式 Action；D：双作用 D: Double acting
- 1：手指开闭行程 Opening/Closing stroke；空白：短行程 Blank: Short Stroke；1：中行程 1: Medium Stroke；2：长行程 2: Long Stroke
- A93：磁感应开关型号 Auto switch

IMHF2系列薄型气爪
IMHF2 Series Low Profile Air Gripper



订购号 / Order

IMHF2 — 12 D 1 R — A93

- IMHF2 — 规格代码 Specification number；薄型气爪 Low Profile Air Gripper
- 12 — 缸径 Bore：8 12 16 20
- D — 动作方式 Action：D：双作用 D：Double acting
- 1 — 手指开闭行程 Stroke：空白：短行程 Blank：Short Stroke；1：中行程 1：MediumStroke；2：长行程 2：Long Stroke
- R — 本体配管型式 Body option：空白：轴向配管 Blank：Axial piping type；R：侧面配管 R：Side piping type
- A93 — 磁感应开关型号 Auto switch

IMHS系列平行开闭型气爪
IMHS Series Parallel Style Air Gripper



订购号 / Order

IMHS 3 — 20 D — M9BL

- 3 — 缸径 Bore：2：2爪/fingers；3：3爪/fingers；4：4爪/fingers
- 20 — 缸径 Bore：16 20 25 32 40 50 63 80 100 125
- D — 动作方式 Action：D：双作用 D：Double acting
- M9BL — 磁感应开关型号 Auto switch

IMSQ系列齿轮齿条式摆台气缸
IMSQ Series Rotary Table/Rack & Pinion Type MSQ Series



订购号 / Order

IMSQB 10 A — A93

- IMSQB — 规格代码 Specification number；IMSQA：高精度型 High precision type；IMSQB：基本型 Basic type
- 10 — 缸径 Bore：10 20 50 70 100 200
- A — 可选项 A：带调节螺钉 With adjustment bolt；R：带油压缓冲器 With internal shock absorber
- A93 — 磁感应开关型号 Auto switch

ICRQ2系列薄型齿轮齿条式摆动气缸
ICRQ2 Series Compact Rotary Actuator/Rack & Pinion Style



订购号 / Order

ICDRQ2B S 30 — 90 C M9BL

- ICDRQ2B — 规格代码 Specification number；ICRQ2B：无内置磁环 Without Built-in magnet；ICDRQ2B：内置磁环 Built-in magnet
- S — 轴形式 Shaft type：S：单轴/Single shaft；W：双轴/Double shaft
- 30 — 缸径 Bore：10 15 20 30 40
- 90 — 摆动角度 Rotating angle：90：80°-100°；180：170°-190°；360：350°-370°
- C — 缓冲形式 Cushion：空白：无气缓冲 Blank：Without cushion；C：气缓冲 C：Air cushion；注：10/15无气缓冲 10/15 Without air cushion
- M9BL — 磁感应开关型号 Auto switch

ICRA1系列齿轮齿条式摆台气缸
ICRA1 Series Rotary Actuator/Rack & Pinion Type



订购号 / Order

ICDRA1 B S U 50 – 180 C – A54

- ICDRA1 规格代码 Specification number
  - ICRA1：无内置磁环 Without Built-in magnet
  - ICDRA1：内置磁环 Built-in magnet
- B 安装形式 Mounting
  - B：基本型/Basic type
  - L：脚座型/Foot type
  - F：法兰型/Flange type
- S 轴形式 Shaft type
  - S：单轴/Single shaft
  - W：双轴/Double shaft
- U 角度调节单元 Angle adjustable type
  - 空白：无角度调节单元/Standard
  - U：带角度调节单元/Angle adjustable
- 50 缸径 Bore
  - 32 50 63 80
- 180 摆动角度 Rotating angle
  - 90：90°
  - 180：180°
  - 100：90°
  - 190：190°
- C 缓冲形式 Air cushion
  - 空白：无气缓冲/Without cushion
  - C：气缓冲/Air cushion
  - 缸径32无气缓冲 Air cushion Except size 32
  - 带角度调节无气缓冲 Air cushion Except angle adjustable type "U"
- A54 磁感应开关型号 Auto switch

ICRB系列叶片式摆动气缸
ICRB Series Rotary Actuator/Vane Type



订购号 / Order

ICDRB2 B W U 20 – 180 S Z – R731

- ICDRB2 规格代码 Specification number
  - ICRB2：无内置磁环 Without Built-in magnet
  - ICDRB2：内置磁环 Built-in magnet
- B 安装形式 Mounting
  - B：基本型/Basic type
- W 轴形式 Shaft type
  - W：双轴/Double shaft
- U 角度调节单元 Angle adjustable type
  - 空白：无角度调节单元/Standard
  - U：带角度调节单元/Angle adjustable
- 20 缸径 Bore
  - 10 15 20 30 40
- 180 摆动角度 Rotating angle
- S 叶片形式 Vane type
  - S：单叶片/Single vane
  - W：双叶片/Double vane
- Z 气口位置 Connecting port location
  - Z：新款，接口位置在主体侧面
  - Z：New design and Connecting port location is on the Side ported
  - 无记号：老款，接口位置在主体侧面
  - nil：Connecting port location is on the Side ported
  - E：接口位置在主体轴向，且带磁带角度调节无E形式
  - E：Connecting port location is on the Axia ported Except ICDRB2BWU
- R731 磁感应开关型号 Auto switch

IACK系列转角下压缸
IACK Sreies Rotary Clamp Cylinder



订购号 / Order

IACK R 32 × 90

- IACK 规格代码 Specification number
  - IACK：单边压板型
  - IACKD：双边压板型
  - 双边压板仅90度可选
- R 旋转方向 Rotation direction
  - L：左/Left
  - R：右/Right
- 32 缸径 Bore
  - 25 32 40 50 63
- 90 旋转角度 Rotating angle
  - 90：90°
  - 180：180°

IJGL系列杠杆气缸
IJGL Series Stopper Cylinder



订购号 / Order

IJGL 25

- IJGL 规格代码 Specification number
  - IJGL：杠杆夹持气爪 Rotary Clamp Cylinder
- 25 缸径 Bore
  - 25 32 40 50 63 80 100

IMK系列回旋夹紧气缸
IMK Series Rotary Clamp Cylinder



订购号 / Order

IMK B 20 × 20 R Z – A93

- IMK — 规格代码 Specification number; IJGL: 杠杆夹持气爪 Rotary Clamp Cylinder
- B — 安装形式 Mounting; B: 标准型/Basic type
- 20 — 缸径 Bore; 12 16 20 25 32 40 50 63
- 20 — 夹紧行程 Clamp stroke
- R — 回转方向 Rotary direction; R: 右回转/Right Rotation; L: 左回转/Left Rotation
- Z — 缸体可选项 Option; 空白: 标准 Blank: Standard type; N: 带臂 N: With arm
- A93 — 磁感应开关型号 Auto switch

ISC系列旋转气缸
ISC Series Rotary Cylinder



订购号 / Order

ISC L 32 × 15 – SE2

- ISC — 规格代码 Specification number; IJGL: 杠杆夹持气爪 Rotary Clamp Cylinder
- L — 固定型式 Fixed type; L: 左旋/Right turn; R: 右旋/Left turn
- 32 — 缸径 Bore; 20 25 32 40
- 15 — 下压行程 Stroke
- SE2 — 磁感应开关型号 Auto switch

ICU系列自由安装气缸
ICU Series Free Mount Cylinder



订购号 / Order

ICU K 10 × 10 D A93

- ICU — 规格代码 Specification number; ICU: 无内置磁环 Without Built-in magnet; ICDU: 内置磁环 Built-in magnet
- K — 活塞杆形式 Rod type; 空白: 基本型/Standard; K: 杆不旋转/Non-rotating; W: 双杆型/Double rod; KW: 双杆型不旋转活塞杆/Double Non-rotating rod
- 10 — 缸径 Bore; 6 10 16 20 25 32
- 10 — 行程 Stroke
- D — 动作方式 Action; D: 双边/Double; S: 单动(弹簧压回)/Single acting, Spring return; T: 单动(弹簧压出)/Single acting, Spring extend
- A93 — 磁感应开关型号

IMGP系列新薄型带导杆气缸
IMGP Series Compact Guide Cylinder



订购号 / Order

IMGP M 40 × 50 – XC8 – A93

- IMGP — 规格代码 Specification number; 薄型带导杆气缸 Compact Guide Cylinder
- M — 轴承种类 Bearing type; M: 滑动轴承/Slide bearing; L: 球轴承/Ball bushing
- 40 — 缸径 Bore
- 50 — 行程 Stroke
- XC8 — 调整行程 Adjustable Stroke; XC8: 进程可调 Adjustable stroke (Adjustable extension type); XC9: 回程可调 Adjustable stroke (Adjustable retraction type)
- A93 — 磁感应开关型号 Auto switch

IMGJ系列微型带导杆气缸
IMGJ Series Miniature Guide Rod Cylinder



订购号 / Order

IMGJ 10 × 20 – F8NL

- 规格代码 Specification number
- 缸径 Bore: 6 10
- 行程 Stroke: 5 10 15 20
- 磁感应开关型号 Auto switch

IMXH系列滑台气缸
IMXH Series Table Cylinders



订购号 / Order

IMXH 10 × 30 – A93

- 规格代码 Specification number: MXH：基本型/Basic type
- 缸径 Bore: 6 10 16 20
- 行程 Stroke
- 磁感应开关型号 Auto switch

IMXS系列滑台气缸
IMXS Series Table Cylinders



订购号 / Order

IMXS 20 × 50 AS F – M9BL

- 规格代码 Specification number: IMXS：基本型/Basic type
- 缸径 Bore: 6 8 12 16 20 25
- 行程 Stroke
- 调整装置 Adjuster option
  - 无记号：无调整器/Without adjuster
  - AS：前进端调整器/Rubber stopper on extension end
  - AT：后退端调整器/Rubber stopper on retraction end
  - A：两端调整器/Rubber stopper on both ends
  - BS：前进端缓冲器/Absorber on extension end
  - BT：后退端缓冲器/Absorber on retraction end
  - B：两端缓冲器/Absorber on both ends
  - ASBT：前进端调整器+后退端缓冲器/Rubber stopper on extension end + Absorber on retraction end
  - BSAT：前进端缓冲器+后退端调整器/Rubber stopper on extension end + Rubber stopper on retraction end
- 功能可选项 Functional option
  - 无记号：标准/Standard
  - F：带缓冲器/With buffer
  - R：带端锁/With end lock
  - P：轴向配管型/Axial piping type
  - FR：带缓冲器·端锁/With buffer and end lock
  - FP：带缓冲器·轴向配管型/With buffer, Axial piping type
- 磁感应开关型号 Auto switch

IMXQ系列滑台气缸
IMXQ Series Table Cylinders



订购号 / Order

IMXQ 12 × 50 AS F – M9BL

- 规格代码 Specification number: IMXQ：基本型
- 缸径 Bore: 6 8 12 16 20 25
- 行程 Stroke
- 调整装置 Adjuster options
  - 无记号：无调整器/Without adjuster
  - AS：前进调整/Extension stroke end adjuster
  - AT：后端调整/Retraction stroke end adjuster
  - A：两端调整器/Extension and Retraction stroke end adjuster
  - BS：前端油压缓冲器/Extension stroke end Shock absorbe
  - BT：后端油压缓冲器/Retraction stroke end Shock absorbe
  - B：两端油压缓冲器/Extension and Retraction stroke end Shock absorbe
  - CS：前端金属限位器/Extension stroke end Metal stopper
  - CT：后端金属限位器/Retraction stroke end Metal stopper
  - C：两端金属限位器/Extension and Retraction stroke end Metal stopper
- 功能可选项 Functional option
  - 无记号：标准/Standard
  - F：带弹簧缓冲器/With buffer
  - R：带端锁/With end lock
  - P：轴向配管型/Axial piping type
  - FR：带弹簧缓冲器和端锁/With buffer, end lock
  - FP：带弹簧缓冲器和轴向配管型/With buffer, axial piping
- 磁感应开关型号 Auto switch

IMXF系列滑台气缸
IMXF Series Table Cylinders



订购号 / Order

IMXF 12 × 50 — M9BL

- 规格代码 Specification number IMXF：基本型/Basic type
- 缸径 Bore 6 10 16 20
- 行程 Stroke
- 磁感应开关型号 Auto switch

IMXW系列滑台气缸
IMXW Series Table Cylinders



订购号 / Order

IMXW 16 × 100 B — M9BL

- 规格代码 Specification number IMXW：基本型/Basic type
- 缸径 Bore 8 12 16
- 行程 Stroke
- 可选项 Option 无记号：标准(带聚氨酸垫)/Standard(Rubber stopper) B：带2个液压缓冲器/With shock absorber(2)
- 磁感应开关型号 Auto switch

IMXP系列滑台气缸
IMXP Series Table Cylinders



订购号 / Order

IMXP 16 × 20 B — M9BL

- 规格代码 Specification number IMXP：基本型/Basic type
- 缸径 Bore 8 12 16
- 行程 Stroke
- 可选项 Option 无记号：标准(橡胶限位器)/Standard(Rubber stopper) B：带2个液压缓冲器/With shock absorber(2) C：金属限位器/Metal stopper
- 磁感应开关型号 Auto switch

ICJP2系列单杆双作用针型气缸
ICJP2 Series Pin Cylinder: Double Acting, Single Rod



订购号 / Order

ICJP2 B 10 × 15 — A93

- 规格代码 Specification number ICJP2：标准型/Basic type ICDJP2：内置磁环/Built-in magnet
- 安装形式 B：基本型/Basic type
- 缸径 Bore 6 10 15
- 行程 Stroke
- 磁感应开关型号 Auto switch

ICJ1系列单作用气缸
ICJ1 Series Air Cylinder/Single Acting



订购号 / Order

ICJ1 B 4 × 15 S

- ICJ1 — 规格代码 Specification number
  - ICJP1：标准型/Basic type
  - ICDJP1：内置磁环/Built-in magnet
- B — 安装形式
  - B：基本型/Basic type
- 4 — 缸径 Bore
  - 4
- 15 — 行程 Stroke
- S — 单作用 Single acting

ICXS系列双轴气缸
ICXS Series Dual Rod Cylinders



订购号 / Order

ICXS M 20 × 100 — Z73

- ICXS — 规格代码 Specification number
- M — 轴承种类 Bearing type
  - M：滑动轴承/Slide bearing
- 20 — 缸径 Bore
  - 10 15 20 25 32
- 100 — 行程 Stroke
- Z73 — 磁感应开关型号 Auto switch

ICXSW系列双轴双出气缸
ICXSW Series Dual Rod Cylinder/Double Rod Type



订购号 / Order

ICXS W M 16 × 100 Z73

- ICXS — 规格代码 Specification number
- W — 双活塞杆双挡板气缸 Double rod type
- M — 轴承种类 Bearing type
  - M：滑动轴承/Ball bushing
- 16 — 缸径 Bore
  - 10 15 20 25 32
- 100 — 行程 Stroke
- Z73 — 磁感应开关型号 Auto switch

ISTM系列滑台气缸
ISTM Series Table Cylinders



订购号 / Order

ISTM B 16 × 100 — CMSG

- ISTM — 规格代码 Specification number
- B — 固定方式 Fixed type
  - B：本体固定型/Body fixed type
  - S：滑块固定型/Sliders fixed type
- 16 — 缸径 Bore
  - 10 16 20 25
- 100 — 行程 Stroke
- CMSG — 磁感应开关型号 Auto switch

ICQM系列薄型导杆型气缸
ICQM Series Compact Cylinder/Guide Rod Type



订购号 / Order

ICQM B 40 × 50 – A93

- ICQM — 规格代码 Specification number
  - ICQM: 无内置磁环 Without Built-in magnet
  - ICDQM: 内置磁环 Built-in magnet
- B — 安装形式 Mounting bracket
  - B: 通孔式(基本型)/Through-hole (Standard)
- 40 — 缸径 Bore
  - 12 16 20 25 32 40 50 63 80 100
- 50 — 行程 Stroke
- A93 — 磁感应开关型号 Auto switch



订购号 / Order

4V 1 – 10 – 06 B – AC220V – W □

- 4V — 规格代码
  - 4V: 二 (三) 位五通电磁阀
  - 4A: 二 (三) 位五通气控阀
  - 3V: 二位三通电磁阀
  - 3A: 二位三通气控阀
  - Specification code
  - 4V: Two (Three)-position Five-way Solenoid Valve
  - 4A: Two (Three)-position Five-way Pneumatic control valve
  - 3V: Two-position Two-way Solenoid Valve
  - 3A: Two-position Two-way Pneumatic control valve
- 1 — 系列代码 Series code
  - 100系列 100 Series
  - 200系列 200 Series
  - 300系列 300 Series
  - 400系列 400 Series
- 10 — 线圈及位数
  - 10: 单头双位置
  - 20: 双头双位置
  - 30C: 双头三位置封闭型
  - 30E: 双头三位置排气型
  - 30P: 双头三位置压力型
  - Coil and Places
  - 10: Single-head Double-position
  - 20: Double-head Double-position
  - 30C: Double-head Three-position Close Type
  - 30E: Double-head Three-position Exhaust Type
  - 30P: Double-head Three-position Pressure Type
- 06 — 接管口径 Joint Pipe Bore
  - M5: M5×0.8
  - 06: G1/8"
  - 08: G1/4"
  - 10: G3/8"
  - 15: G1/2"
- B — 接管形式及初始状态
  - 空白: 管接式
  - B: 二位五通板接式 三位五通板接式
  - NC: 二位三通常闭型
  - NO: 二位三通常开型
  - Joint Pipe Form and Initial State
  - Blank: Pipe Connection Type
  - B: Two-position Five-way Plate Connection Type Three-position Five-way Plate Connection Type
  - NC: Two-position Three-way Normal Close Type
  - NO: Two-position Three-way Normal Open Type
- AC220V — 标准电压 Standard Voltage
  - DC12V
  - DC24V
  - AC24V 50Hz/60Hz
  - AC110V 50Hz/60Hz
  - AC220V 50Hz/60Hz
  - AC380V 50Hz/60Hz
- W — 接线形式
  - 空白: 标准端子式
  - LD: 茶色带灯端子式
  - W: 引线式
  - Electrical entry
  - Blank: standard Connector
  - LD: Brown with Light Connector
  - W: Lead Wire Type
- □ — 空白: G牙 PT: PT牙
  - Blank: G Thread
  - PT: PT Thread

技术参数 / Specifications

型号 Model	4V110-M5	4V120-M5	4V130C-M5	4V130E-M5	4V130P-M5	4V110-06	4V120-06	4V130C-06	4V130E-06	4V130P-06
	4A110-M5	4A120-M5	4A130C-M5	4A130E-M5	4A130P-M5	4A110-06	4A120-06	4A130C-06	4A130E-06	4A130P-06
位通数 Position and Way NO.	二位五通 Two-position Five-way		三位五通 Three-position Five-way			二位五通 Two-position Five-way		三位五通 Three-position Five-way		
有效截面积 Effective Sectional Area	10mm²(CV=0.56)		7mm²(CV=0.40)			12mm²(CV=0.67)		9mm²(CV=0.5)		
位置数 Position Number	二位三通/Two-position Three-way					二位三通/Two-position Three-way				
有效截面积 Effective Sectional Area	10mm²(CV=0.56)					12mm²(CV=0.67)				
接管口径 Port Size	进气=出气=排气=M5×0.8 Air Inlet=Air Outlet=Exhaust=M5×0.8					进气=出气=排气=G1/8 Air Inlet=Air Outlet=Exhaust=G1/8				
工作介质 Working Medium	空气 (经40μm滤网过滤) / Air (40Micron Filtered)									
动作方式 Action Type	内部先导式 / Inner Guide Type									
使用压力 Working Pressure	0.15~0.8MPa									
最大耐压力 Max. Pressure Resisance	1.2MPa									
工作温度 Working Temperature	5~50°C									
电压范围 Voltage Range	±10%									
耗电量 Power Consumption	AC: 5VA DC: 2.8W									
绝缘性及防护等级 Insulation & Protection Class	F级. IP65 / F Class. IP 65									
接线形式 Wiring Form	出线式或端子式 / Lead wire or Connector type									
最高动作频率 Max. Frequency	每秒五次 / 5 Times / Sec									
最短励磁时间 Shortest Activate Time	0.05秒 / 0.05 Second									

技术参数 / Specifications

型 号 Model	4V210-06	4V220-06	4V230C-06	4V230E-06	4V230P-06	4V210-08	4V220-08	4V230C-08	4V230E-08	4V230P-08
	4A210-06	4A220-06	4A230C-06	4A230E-06	4A230P-06	4A210-08	4A220-08	4A230C-08	4A230E-08	4A230P-08
位通数 Position and Way NO.	二位五通 Two-position Five-way		三位五通 Three-position Five-way			二位五通 Two-position Five-way		三位五通 Three-position Five-way		
有效截面积 Effective Sectional Area	14mm²(CV=0.78)		12mm²(CV=0.67)			16mm²(CV=0.89)		12mm²(CV=0.67)		
位通数 Position and Way NO.	二位三通/Two-position Three-way					二位三通/Two-position Three-way				
有效截面积 Effective Sectional Area	14mm²(CV=0.78)					16mm²(CV=0.89)				
接管口径 Port Size	进气=出气=排气=G1/8" Air Inlet=Air Outlet=Exhaust=G1/8"					进气=出气=G1/4"排气=G1/8" Air Inlet=Air Outlet=G1/4" Exhaust=G1/8"				
工作介质 Working Medium	空气 (经40μm滤网过滤) / Air (40Micron Filtered)									
动作方式 Action Type	内部先导式 / Inner Guide Type									
使用压力 Working Pressure	0.15~0.8MPa									
最大耐压力 Max. Pressure Resisance	1.2MPa									
工作温度 Working Temperature	5~50℃									
电压范围 Voltage Range	±10%									
耗电量 Power Consumption	AC: 4VA DC: 3W									
绝缘性及防护等级 Insulation & Protection Class	F级, IP65 / F Class, IP 65									
接线形式 Wiring Form	出线式或端子式 / Lead wire or Connector type									
最高动作频率 Max. Frequency	每秒五次 / 5 Times/Sec									
最短励磁时间 Shortest Activate Time	0.05秒 / 0.05 Second									

型 号 Model	4V310-08	4V320-08	4V330C-08	4V330E-08	4V330P-08	4V310-10	4V320-10	4V330C-10	4V330E-10	4V330P-10
	4A310-08	4A320-08	4A330C-08	4A330E-08	4A330P-08	4A310-10	4A320-10	4A330C-10	4A330E-10	4A330P-10
位通数 Position and Way NO.	二位五通 Two-position Five-way		三位五通 Three-position Five-way			二位五通 Two-position Five-way		三位五通 Three-position Five-way		
有效截面积 Effective Sectional Area	25mm²(CV=1.40)		18mm²(CV=1.00)			30mm²(CV=1.68)		18mm²(CV=1.00)		
位通数 Position and Way NO.	二位三通/Two-position Three-way					二位三通/Two-position Three-way				
有效截面积 Effective Sectional Area	25mm²(CV=1.40)					30mm²(CV=1.68)				
接管口径 Port Size	进气=出气=排气=G1/4" Air Inlet=Air Outlet=Exhaust=G1/4"					进气=出气=G3/8"排气=G1/4" Air Inlet=Air Outlet=G3/8" Exhaust=G1/4"				
工作介质 Working Medium	空气 (经40um滤网过滤) / Air (40Micron Filtered)									
动作方式 Action Type	内部先导式 / Inner Guide Type									
使用压力 Working Pressure	0.15~0.8MPa									
最大耐压力 Max. Pressure Resisance	1.2MPa									
工作温度 Working Temperature	5~50℃									
电压范围 Voltage Range	±10%									
耗电量 Power Consumption	AC: 4VA DC: 3W									
绝缘性及防护等级 Insulation & Protection Class	F级, IP65 / F Class, IP 65									
接线形式 Wiring Form	出线式或端子式 / Lead wire or Connector type									
最高动作频率 Max. Frequency	每秒四次 / 4 Times / Sec									
最短励磁时间 Shortest Activate Time	0.05秒 / 0.05 Second									

型 号 Model	4V410-15	4V420-15	4V430C-15	4V430E-15	4V430P-15
	4A410-15	4A420-15	4A430C-15	4A430E-15	4A430P-15
位置数 Position Number	二位五通 Two-position five-way		三位五通 Three-position five-way		
有效截面积 Effective Sectional Area	50mm²（CV=2.79）		30mm²（CV=1.6 8）		
型号 Model	3V410-15	3V420-15	3A410-15	3A420-15	
位置数 Position Number	二位三通 Two-position Three-way				
有效截面积 Effective Section Area	50mm²（CV=2.79）				
接管口径 Port Connection	进气=出气=排气=G1/2" / Air Inlet=Air Outlet=Exhaust=G1/2"				
工作介质 Working Medium	经40微米过滤的空气/40 Micron Filtered Air				
动作方式 Action Type	内部先导式/Internally pilot-actuated				
使用压力 Working-Pressure	0.15~0.8MPa				
最大耐压力 Max.Pressure Resistance	1.2MPa				
工作温度 Operating Temperature	5~50℃				
电压范围 Voltage Range	±10%				
耗电量 Power Consumption	AC：4VA DC：3W				
绝缘性及防护等级 Insulation & Protection Class	F级, IP65/F Class.IP65				
接线形式 Electrical entry	出线式或端子式 / Lead Wire or Connector type				
最高动作频率 Highest Action Frequency	每秒三次 / 3Times/sec				
最短励磁时间 Response time	0.05 秒 / 0.05 Second				





订购号 / Order

ISY 5 — 1 — 06 — DC24V □

- 5 系列代码 3000系列 5000系列
- 1 线圈及位数 1：单头双位置 2：双头双位置
- 06 接管口径 M5：M5X0.8 06：G1/8 08：G1/4
- DC24V 标准电压 DC24V AC220V
- □ 引线长度 无：标准线长300m L500：表标引线长为500mm，引线长度可定制



订购号 / Order

3V 1 — 06 B — AC220V — W — F

- 3V 规格代码 3V: 二位三通电磁阀 Specification Code 3V: Two-position Three-way Solenoid Valve
- 1 系列代码 1:100系列 Series Code 1:100 Series
- 06 接管口径 M5:M5 06:1/8" 08:1/4" Joint Pipe Bore M5:M5 06:1/8" 08:1/4"
- B 连接方式 空白：管接式 B:板接式 Connecting Type Blank:Pipe connection type B:Plate connection type
- AC220V 标准电压 Standard Voltage DC12v DC24v AC24v 50Hz/60Hz AC110v 50Hz/60Hz AC220v 50Hz/60Hz AC380v 50Hz/60Hz
- W 接线形式 空白:标准端子式 LD:茶色带灯端子式 W:引线式 Electrical entry Blank:standard Connector LD:Brown with Light Connector W:Lead Wire Type
- F 联座数 1F-20F



订购号 / Order

4L 2 — 10 08 □

- 4L 规格代码 4L：二位五通手拉阀 3L：二位三通手拉阀 Specification code 4L: Two-position Five-way Push-pull Valve 3L: Two-position Three-way Push-pull Valve
- 2 系列代码 200系列 300系列 400系列 Series Code 200 Series 300 Series 400 Series
- 10 位置数 10：单头双位置 Number of Places 10: Single-head Double-position
- 08 接管口径 Joint Pipe Bore 06: G1/8" 08: G1/4" 10: G3/8"
- □ 空白：G牙 PT：PT牙 Blank: G Thread PT: PT Thread





订购号 / Order

4H 2 10 — 08 L — M □

规格代码
4H: 二(三)位五通手拨阀
3H: 二位三通手板阀
Specification code
4H: Two(Three)-position Five-way Hand control Valve
3H: Two-Position Three-Way hand control valve

系列代码
2: 200系列
3: 300系列
4: 400系列
Series Code
2: 200 Series
3: 300 Series
4: 400 Series

位通数
10: 单头双位置
30: 单头三位置
Position and Way Number
10: Single-head Double -position
30: Double-head Three -position

接管口径
Joint Pipe Bore
06: G1/8"
08: G1/4"
10: G3/8"
15: G1/2"

形式代号
空白: 三位五通复位型
L: 三位五通锁型
Type code
Blank: Three-position Five-way Reset Type
L: Three-position Five-way Locking Type

安装方式
空白: 通孔螺丝安装
M: 带螺母隔板安装
Installation method
Blank:Through-hole screw installation
M:Nut-plate installation

空白: G牙
PT: PT牙
Blank: G Thread
PT: PT Thread


4F210-08


FV420


FV320

订购号 / Order

4F 2 — 10 08 L

规格代码
4F: 二位五通脚踏阀
Specification code
4F: Two-position Five-way Foot Valve

系列代码
2: 200系列
Series Code
2: 200 Series

位置数
10: 单头双位置
Number of Places
10: Single-head Double-position

接管口径
Joint Pipe Bore
08: G1/4"

形式代号
Type code
空白: 标准型
L: 附锁型
G: 附罩型
LG: 附锁及罩型
Blank: Standard Type
L: With Lock
G: With Cover
LG: With Lock and Cover

订购号 / Order

FV 320

规格代码
脚踏阀
Specification code
Foot Valve

位通数
320: 二位三通
420: 二位四通
Position and Way Number
320: Two-position Three-Way
420: Two-position Four-Way


2V025-08

订购号 / Order

2V 025 — 08 — AC220V

规格代码
2V: 二位二通电磁阀
Specification code
2V: Two-position Two-way Solenoid Valve

流量孔径
Aperture of Flow Rate
025: 2.5mm

接管口径
Joint Pipe Bore
06: G1/8"
08: G1/4"

标准电压
Standard Voltage
DC12V
DC24V
AC24V 50Hz/60Hz
AC110V 50Hz/60Hz
AC220V 50Hz/60Hz

图形符号 / Symbol

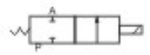


2S-040-10


2S-200-20


2S-200-20D

图形符号 / Symbol

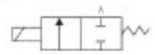

订购号 / Order

2S 025 — 08 F — AC110V — D

规格代码
2S：不锈钢二位二通电磁阀（直动式）
Specification code
2S:Stainless steel Two position two way solenoid valve (direct drive type)

流量孔径
Aperture of Flow Rate
025:2.5mm 250:25mm
050:5.0mm 350:35mm
160:16mm 400:40mm
200:20mm 500:50mm

接管口径
Joint Pipe Bore
08:1/4" 25:1"
10: 3/8" 35:1 1/4"
15:1/2" 40:1 1/2"
20:3/4" 50:2"

安装形式
空白：管接式
F：带法兰型
Installation
Blank:Pipe Jiont type
F:Flange Type

标准电压
Standard Voltage
DC12v
DC24v
AC36v 50Hz/60Hz
AC110v 50Hz/60Hz
AC220v 50Hz/60Hz
AC380v 50Hz/60Hz

接线形式
空白：表示引线式铁壳线圈
D：接线盒式封塑线圈
E：防爆线圈
G：防水线圈
Electrical entry
Blank:Lead Wire Type
D:Join Connector
E:Blast-proof Coil
G:Water-proof Coil


2S-160-15D-NO

图形符号 / Symbol

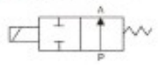

订购号 / Order

2S 160 — 10 NO — AC110V — D

规格代码
2W：二位二通电磁阀（直动式）
2S：不锈钢二位二通电磁阀（直动式）
Specification code
2W: Two position two way solenoid valve(direct drive type)
2S: Stainless steel two position two way solenoid valve (direct drive type)

流量孔径
Aperture of Flow Rate
040:4.0mm
160:16mm
200:20mm
250:25mm

接管口径
Joint Pipe Bore
10: 3/8"
15:1/2"
20:3/4"
25:1"

初始状态
No：常开型
Initial Estate
Normal Open

标准电压
Standard Voltage
DC12v
DC24v
AC36v 50Hz/60Hz
AC110v 50Hz/60Hz
AC220v 50Hz/60Hz
AC380v 50Hz/60Hz

接线形式
空白：表示引线式铁壳线圈
D：接线盒式封塑线圈
E：防爆线圈
G：防水线圈
Electrical entry
Blank:Lead Wire Type
D:Join Connector
E:Blast-proof Coil
G:Water-proof Coil



2L-170-15

图形符号 / Symbol

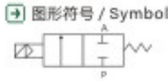

订购号 / Order

2L	170	—	15	—	AC110V	—	D
规格代码 2L：蒸汽型二位二通电磁阀 Specification code 2L: Steam type two position two way solenoid valve	流量孔径 Aperture of Flow Rate 170:17mm 200:20mm 300:30mm 500:50mm		接管口径 Joint Pipe Bore 10: 3/8"　35:1 ¼" 15:1/2"　40:1 ½" 20:3/4"　50:2" 25:1"		标准电压 Standard Voltage DC12v DC24v AC36v　50Hz/60Hz AC110v　50Hz/60Hz AC220v　50Hz/60Hz AC380v　50Hz/60Hz		接线形式 空白：表示引线式铁壳线圈 D：接线盒式封塑线圈 E：防爆线圈 G：防水线圈

Electrical entry
Blank:Lead Wire Type
D:Join Connector
E:Blast-proof Coil
G:Water-proof Coil



2W-025-08



2W-040-10

图形符号 / Symbol

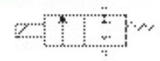

订购号 / Order

2W	025	—	08	F	—	AC110V	—	D
规格代码 2W：二位二通电磁阀 （直动式） 2WH：二位二通电磁阀 （高压直动式） Specification code 2W: Two position two way solenoid valve(direct drive type) 2WH: Two position two way solenoid valve(high pressure direct drive type)	流量孔径 Aperture of Flow Rate 012:1.2mm 020:2.0mm 025:2.5mm 040:4.0mm		接管口径 06: 1/8" 08: 1/4" 10: 3/8" Joint Pipe Bore 06: 1/8" 08: 1/4" 10: 3/8"	安装形式 空白：管接式 F：带法兰型 Installation Blank:Pipe Jiont type F:Flange Type		标准电压 Standard Voltage DC12v DC24v AC36v　50Hz/60Hz AC110v　50Hz/60Hz AC220v　50Hz/60Hz AC380v　50Hz/60Hz		接线形式 空白：表示引线式铁壳线圈 D：接线盒式封塑线圈 E：防爆线圈 G：防水线圈 Electrical entry Blank:Lead Wire Type D:Join Connector E:Blast-proof Coil G:Water-proof Coil



2W-160-15D



2W-160-15

图形符号 / Symbol

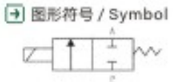

订购号 / Order

2W	160	—	15	F	—	AC110V	—	D
规格代码 2W：二位二通电磁阀 （直动式） Specification code 2W: Two position two way solenoid valve (direct drive type)	流量孔径 Aperture of Flow Rate 160:16mm 200:20mm 250:25mm 350:35mm 400:40mm 500:50mm		接管口径 Joint Pipe Bore 10: 3/8" 15:1/2" 20:3/4" 25:1" 35:1 ¼" 40:1 ½" 50:2"	安装形式 空白：管接式 F：带法兰型 Installation Blank:Pipe Jiont type F:Flange Type	标准电压 Standard Voltage DC12v DC24v AC36v　50Hz/60Hz AC110v　50Hz/60Hz AC220v　50Hz/60Hz AC380v　50Hz/60Hz		接线形式 空白：表示引线式铁壳线圈 D：接线盒式封塑线圈 E：防爆线圈 G：防水线圈 Electrical entry Blank:Lead Wire Type D:Join Connector E:Blast-proof Coil G:Water-proof Coil		

订购号 / Order

AC	2000	—	02	D	—	W
规格代码 Specification code AC：二、三联件　AC: Two、Three Elements AF：空气过滤器　AF: Air Filter AR：减压阀　AR: Air Regulator AL：油雾器　AL: Air Lubricator AW：过滤减压阀　AW: Filter Regulator	系列代号 Series code 1000系列 1000 Series 2000系列 2000 Series 3000系列 3000 Series 4000系列 4000 Series 5000系列 5000 Series		接管口径 Joint Pipe Bore M5: M5 01: G1/8 02: G1/4 03: G3/8 04: G1/2 06: G3/4	排水方式 Drian Type 空白：差压排水 M：手动排式 D：自动排水式 Blank: Differential pressure draining type M: Standard manual type D: Automnatic draining type		颜色代码 Color code 空白：金黄色 W：白色 Blank: Auratus W: White

技术参数 / Specifications

保证耐压力 /Ensured Pressure Resistance	1.5MPa(15kgf/cm²)
最高使用压力 /Highest Working Pressure	1.0MPa(10kgf/cm²)
环境及流体温度 /Ambient and Fluid Temperature	5~60℃
* 过滤精度 /* Filter Fineness	25μm
建议用油 /Recommended Oil Use	透平1号油 / Turbine No.1 Oil　ISOVG32
容器材料 /Container Material	聚碳酸脂 /Polycarbonate
防护罩 /Protective Cover	AC1000~2000(无) /(Not Available)　AC2500~5000(有)/(Available)
调压范围 /Pressure Regulating Range	AC1000:0.05~0.7MPa(0.5~7kgf/cm²)　AC2000~5000:0.05~0.85MPa(0.5~8.5kgf/cm²)
阀型 / Valve Type	带溢流型 /With Overflow

产品展示 / Product display





图形符号 / Symbol

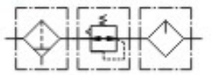

型号 Model	规格 / Specifications							配件 / Accessories	
	组件 / Assembly			*额定流量 Rated Flow (L/min)	**接管口径 Port Size (G)	压力表口径 Pressure Gauge Size	重量 Weight (kg)	托架 Bracket (2个)	压力表 Pressure Gauge
	过滤器 Filter	减压阀 Regulator	油雾器 Lubricator						
AC1000-M5	AF1000	AR1000	AL1000	90	M5	1/16	0.26	Y10L	G27-10-R1
AC2000-01	AF2000	AR2000	AL2000	500	1/8	1/8	0.74	Y20L	G36-10-01
AC2000-02					1/4				
AC2500-02	AF3000	AR2500	AL3000	1500	1/4	1/8	1.04	Y30L	
AC2500-03					3/8				
AC3000-02	AF3000	AR3000	AL3000	2000	1/4	1/8	1.18	Y30L	
AC3000-03					3/8				
AC4000-03	AF4000	AR4000	AL4000	4000	3/8	1/4	2.14	Y40L	G46-10-02
AC4000-04					1/2				
AC4000-06	AF4000-06	AR4000-06	AL4000-06	4500	3/4	1/4	2.47	Y50L	
AC5000-06	AF5000	AR5000	AL5000	5000	3/4	1/4	3.82	Y60L	
AC5000-10					1				

* 供应压力为 0.7MPa(7.1kgf/cm²)设定压力为 0.5MPa(5.1kgf/cm²)的情况下
*Under the circumstance that the supply pressure is 0.7MPa(7.1kgf/cm²)and set pressure is 0.5MPa(5.1kgf/cm²)
**接管口 径另有 Rc、NPT 螺纹可供选择：
Rc.and NPT port size are available.

产品展示 / Product display





图形符号 / Symbol

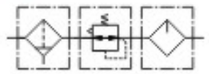

型号 Model	规格 / Specifications						配件 / Accessories	
	组件 / Assembly		*额定流量 Rated Flow (L/min)	**接管口径 Port Size (G)	压力表口径 Pressure Gauge Size	重量 Weight (kg)	托架 Bracket (2个)	压力表 Pressure Gauge
	过滤减压阀 Filter with pressure reducer	油雾器 Lubricator						
AC1010-M5	AW1000	AL1000	90	M5	1/16	0.22	Y10T	G27-10-R1
AC2010-01	AW2000	AL2000	500	1/8	1/8	0.66	Y20T	G36-10-01
AC2010-02				1/4				
AC3010-02	AW3000	AL3000	1700	1/4	1/8	0.98	Y30T	
AC3010-03				3/8				
AC4010-03	AW4000	AL4000	3000	3/8	1/4	1.93	Y40T	G46-10-02
AC4010-04				1/2				
AC4010-06	AW4000-06	AL4000-06	3000	3/4	1/4	1.99	Y50T	
AC5010-06	AW5000	AL5000	4000	3/4	1/4	3.20	Y60T	
AC5010-10				1				





图形符号 / Symbol

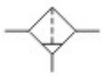

型号 Model	规格 / Specifications				配件 Accessories	放水器功能 Drain Function	自动排水型号 Auto Drain Model
	*额定流量 Rated Flow (L/min)	**接管口径 Port Size (G)	杯容量 Bowl Capacity (cm^3)	重量 Weight (kg)	托架 Bracket (2个)		
AF1000-M5	110	M5	4	0.07	-	手动排水 /Manual Drain	
AF2000-01	750	1/8	15	0.19	B240		AF2000-01D
AF2000-02		1/4					AF2000-02D
AF3000-02	1500	1/4	20	0.29	B340	a.停气排水 /Air Shutoff Drain	AF3000-02D
AF3000-03		3/8					AF3000-03D
AF4000-03	4000	3/8	45	0.55	B440		AF4000-03D
AF4000-04		1/2					AF4000-04D
AF4000-06	6000	3/4	45	0.58	B540	b.手动排水 /Manual Drain	AF4000-06D
AF5000-06	7000	3/4	130	1.08	B640		AF5000-06D
AF5000-10		1					AF5000-10D

产品展示 / Product display





图形符号 / Symbol

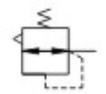

型号 Model	规格 / Specifications				配件 / Accessories	
	*额定流量 Rated Flow (L/min)	**接管口径 Port Size (G)	压力表口径 Pressure Gauge Size (G)	重量 Weight (kg)	托架 Bracket	压力表 Pressure Gauge
AR1000-M5	100	M5	1/16	0.08	B120	G27-10-R1
AR2000-01	550	1/8	1/8	0.27	B220	G36-10-01
AR2000-02		1/4				
AR2500-02	2000	1/4	1/8	0.27	B220	G36-10-01
AR2500-03		3/8				
AR3000-02	2500	1/4	1/8	0.41	B320	
AR3000-03		3/8				
AR4000-03	6000	3/8	1/4	0.84	B420	G46-10-02
AR4000-04		1/2				
AR4000-06	6000	3/4	1/4	0.94		
AR5000-06	8000	3/4	1/4	1.19		
AR5000-10		1				





图形符号 / Symbol



型号 Model	规格 / Specifications				重量 Weight (kg)	配件 / Accessories
	*油滴最小流量 Minimal Flow of Oil Drop(Rops/min)	*额定流量 Rated Flow (L/min)	**接管口径 Port Size (G)	杯容量 Bowl Capacity (cm^3)		托架 Bracket
AL1000-M5	4	95	M5	7	0.07	-
AL2000-01	15	800	1/8	25	0.22	B240
AL2000-02			1/4			
AL3000-02	30	1700	1/4	50	0.30	B340
AL3000-03	40		3/8			
AL4000-03	40	5000	3/8	130	0.56	B440
AL4000-04	50		1/2			
AL4000-06	50	6300	3/4	130	0.58	B540
AL5000-06	190	7000	3/4	130	1.08	B640
AL5000-10			1			

产品展示 / Product display





图形符号 / Symbol

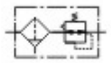

型号 Model	规格 / Specifications				配件 / Accessories		放水器功能 Drain Function	自动排水型号 Auto Drain Model
	*额定流量 Rated Flow (L/min)	**接管口径 Port Size (G)	压力表口径 Pressure Gauge Size (G)	重量 Weight (kg)	托架 Bracket	压力表 Pressure Gauge		
AW1000-M5	100	M5	1/16	0.09	B120	G27-10-R1	手动排水 /Manual Drain	
AW2000-01	550	1/8	1/8	0.36	B220	G36-10-01		AW2000-01D
AW2000-02		1/4						AW2000-02D
AW3000-02	2000	1/4	1/8	0.56	B320		a.停气排水 /Air Shutoff Drain	AW3000-02D
AW3000-03		3/8						AW3000-03D
AW4000-03	4000	3/8	1/4	1.15	B420	G46-10-02		AW4000-03D
AW4000-04		1/2						AW4000-04D
AW4000-06	4500	3/4	1/4	1.21			b.手动排水 /Manual Drain	AW4000-06D
AW5000-06	5500	3/4	1/4	1.70				AW5000-06D
AW5000-10		1						AW5000-10D

订购号 / Order

AC — 规格代码 Specification code
- AC、BC：三联件 / AC、BC：Three Elements
- AFC、BFC：二联件 / AFC、BFC：Two Elements
- AF、BF：空气过滤器 / AF、BF：Air Filter
- AR、BR：减压阀 / AR、BR：Air Regulator
- AL、BL：油雾器 / AL、BL：Air Lubricator
- AFR、BFR：过滤减压阀 / AFR、BFR：Filter Regulator

2000 — 系列代号 Series code
- 1500系列 1500 Series
- 2000系列 2000 Series
- 3000系列 3000 Series
- 4000系列 4000 Series

D — 排水方式 Drian Type
- 空白：差压排水
- M：手动排式
- D：自动排水式
- Blank: differential pressure draining type
- M: standard manual type
- D: automnatic draining type

—

PT — 牙型代码 Tooth code
- 空白：G牙
- PT：PT牙
- Blank: G Thread
- PT: PT Thread

技术参数 / Specifications

保证耐压力/Ensured Pressure Resistance	1.0MPa(10kgf/cm²)
使用压力范围/ Working Pressure	0.05~0.85MPa(8.5kgf/cm²)
环境及流体温度/Ambient and Fluid Temperature	5~60℃
*过滤精度/*Filter Fineness	40μm
建议用油/Recommended Oil Use	透平1号油/Turbine No.1 Oil ISOVG32
阀型/Valve Type	带溢流型/With Overflow

产品展示 / Product display



图形符号 / Symbol



型号 Model	组件 / Assembly			接管口径 Port Size	压力表口径 Pressure Gauge Size
	过滤器 Filter	减压阀 Regulator	油雾器 Lubricator		
AC1500	AF1500	AR1500	AL1500	G1/8	G1/8
AC2000	AF2000	AR2000	AL2000	G1/4	G1/8
BC2000	BF2000	BR2000	BL2000	G1/4	G1/4
BC3000	BF3000	BR3000	BL3000	G3/8	G1/4
BC4000	BF4000	BR4000	BL4000	G1/2	G1/4



图形符号 / Symbol

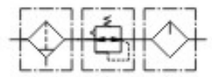

型号 Model	组件 / Assembly		接管口径 Port Size	压力表口径 Pressure Gauge Size
	过滤减压阀 Filter&Regulator	油雾器 Lubricator		
AFC1500	AFR1500	AL1500	G1/8	G1/8
AFC2000	AFR2000	AL2000	G1/4	G1/8
BFC2000	BFR2000	BL2000	G1/4	G1/4
BFC3000	BFR3000	BL3000	G3/8	G1/4
BFC4000	BFR4000	BL4000	G1/2	G1/4

产品展示 / Product display



图形符号 / Symbol



型号 Model	接管口径 Port Size	压力表口径 Pressure Gauge Size
AFR1500	G1/8	G1/8
AFR2000	G1/4	G1/8
BFR2000	G1/4	G1/4
BFR3000	G3/8	G1/4
BFR4000	G1/2	G1/4



图形符号 / Symbol

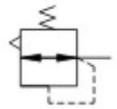

型号 Model	接管口径 Port Size	压力表口径 Pressure Gauge Size
AR1500	G1/8	G1/8
AR2000	G1/4	G1/8
BR2000	G1/4	G1/4
BR3000	G3/8	G1/4
BR4000	G1/2	G1/4



图形符号 / Symbol

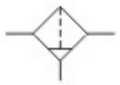

型号 Model	接管口径 Port Size
AF1500	G1/8
AF2000	G1/4
BF2000	G1/4
BF3000	G3/8
BF4000	G1/2



图形符号 / Symbol

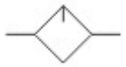

型号 Model	接管口径 Port Size
AL1500	G1/8
AL2000	G1/4
BL2000	G1/4
BL3000	G3/8
BL4000	G1/2

订购号 / Order

OFC — **G1/8** — **MINI** — **D**

OFC
规格代码
Specification code
OFC：二联件　OFC：Two Elements
OFR：过滤减压阀　OFR：Filter Regulator
OR：减压阀　OR：Air Regulator

G1/8
接管口径
Joint Pipe Bore
G1/8
G1/4
G3/8
G1/2
G3/4
G1

MINI
系列代号
Series code
MINI系列　MINI Series
MIDI系列　MIDI Series
MAXI系列　MAXI Series

D
排水方式
Drian Type
空白：差压排水　手动排式
D：自动排水式
Blank：Differential pressure+manual draining type
D：Automatic draining type

技术参数 / Specifications

保证耐压力 / Ensured Pressure Resistance	1.5MPa(15kgf/cm²)
使用压力范围 / Working Pressure	0.05～1.2MPa(12kgf/cm²)
环境及流体温度 / Ambient and Fluid Temperature	5～60℃
*过滤精度 / *Filter Fineness	25μm
建议用油 / Recommended Oil Use	透平1号油 / Turbine No.1 Oil　ISOVG32
阀型 / Valve Type	带溢流型 / With Overflow

图形符号 / Symbol

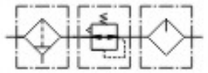



型号 Model	额定流量 Rated Flow (L/min)	接管口径 Port Size	压力表口径 Pressure Gauge Size	结构特点 Features of Structure
OFC-G1/8-MINI	700	G1/8	G1/8	带水分离合器的烧结式过滤器 Sintered Filter With Water Spartor 油雾型自动可变节流式 Direct Constant-density Lubricator MINI/MIDI: 膜片式减压阀 (Diaphragm Type Regulator) MAXI: 活塞式减压阀 (Piston Regulator)
OFC-G1/4-MINI	1000	G1/4	G1/8	
OFC-G3/8-MINI	1200	G3/8	G1/8	
OFC-G3/8-MIDI	2000	G3/8	G1/4	
OFC-G1/2-MIDI	2600	G1/2	G1/4	
OFC-G3/4-MIDI	2600	G3/4	G1/4	
OFC-G3/4-MAXI	7000	G3/4	G1/4	
OFC-G1-MAXI	8000	G1	G1/4	

图形符号 / Symbol

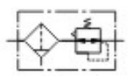



型号 Model	额定流量 Rated Flow (L/min)	接管口径 Port Size	压力表口径 Pressure Gauge Size	结构特点 Features of Structure
OFR-G1/8-MINI	700	G1/8	G1/8	带水分离合器的烧结式过滤器 Sintered Filter With Water Spartor MINI/MIDI: 膜片式减压阀 (Diaphragm Type Regulator) MAXI: 活塞式减压阀 (Piston Regulator)
OFR-G1/4-MINI	1000	G1/4	G1/8	
OFR-G3/8-MINI	1200	G3/8	G1/8	
OFR-G3/8-MIDI	2000	G3/8	G1/4	
OFR-G1/2-MIDI	2600	G1/2	G1/4	
OFR-G3/4-MIDI	2600	G3/4	G1/4	
OFR-G3/4-MAXI	7000	G3/4	G1/4	
OFR-G1-MAXI	8000	G1	G1/4	

图形符号 / Symbol

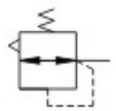



型号 Model	额定流量 Rated Flow (L/min)	接管口径 Port Size	压力表口径 Pressure Gauge Size	结构特点 Features of Structure
OR-G1/8-MINI	800	G1/8	G1/8	MINI/MIDI: 膜片式减压阀 (Diaphragm Type Regulator) MAXI: 活塞式减压阀 (Piston Regulator)
OR-G1/4-MINI	1500	G1/4	G1/8	
OR-G3/8-MINI	1700	G3/8	G1/8	
OR-G3/8-MIDI	3200	G3/8	G1/4	
OR-G1/2-MIDI	3500	G1/2	G1/4	
OR-G3/4-MIDI	3500	G3/4	G1/4	
OR-G3/4-MAXI	11000	G3/4	G1/4	
OR-G1-MAXI	11500	G1	G1/4	



订购号 / Order

AC — 25 — 25 — — 2 — N

规格代码 Specification number
AD:可调系列 Adjustable Series
AC:多孔不可调系列 Self Compensation
ACD:双向缓冲系列 Double Action Mode
HR:液压速度控制器 Hydraulic Speed Controllers

本体外螺纹 Thread	
06:M6	33:M33
08:M8	36:M36
10:M10	42:M42
12:M12	45:M45
14:M14	64:M64
16:M16	85:M85
20:M20	24:Φ24
25:M25	32:Φ31
27:M27	

行程 Stroke

特性 Characteristics
1:AC系列高速型 High Speed For AC
2:AC系列中速型 Middle Speed For AC
3:AC系列低速型 Low Speed For AC
5:AD系列可调低速型 AD Speed Controller
K:高吸收能量 High Energy

缓冲 Cushion
空白：有撞击头/消声垫 Blank:With Cap
N:无撞击头/消声垫 Without Cap
C：短行程液压缓冲器 C:Compact hydraulic Shock Abaorbers

技术参数 / Specifications

AC 不可调自动补偿系列 (AC Self-compensation Series)

型号 Model	描述 Describe	行程 Stroke	最大吸收能量 Energy Per Cyle	小时吸收能量E Energy Per Hour	最大有效重量 Effective Weight	最高撞击速度 Impact Speed	工作温度 Temperature
		MM	NM	NM	KG	m/s	℃
AC0604-1	高速型 High Speed	4	1	1350	0.3	4	-45~+80
AC0604-2	中速型 Middle Speed				1.5	2	
AC0604-3	低速型 Low Speed				4.3	1	
AC0806-1	高速型 High Speed	6	2.5	8800	0.6	4	-45~+80
AC0806-2	中速型 Middle Speed				2.2	2	
AC0806-3	低速型 Low Speed				6.1	1	
AC1005-1	高速型 High Speed	5	3	10800	1.5	4	-45~+80
AC1005-2	中速型 Middle Speed				3	2	
AC1005-3	低速型 Low Speed				8	1	
AC1008-1	高速型 High Speed	8	6	15200	2	4	-45~+80
AC1008-2	中速型 Middle Speed				5	2	
AC1008-3	低速型 Low Speed				10	1	
AC1210-1	高速型 High Speed	10	9	17800	5	4	-45~+80
AC1210-2	中速型 Middle Speed				10	2	
AC1210-3	低速型 Low Speed				30	1	
AC1412-1	高速型 High Speed	12	18	30000	8	4	-45~+80
AC1412-2	中速型 Middle Speed				50	2	
AC1412-3	低速型 Low Speed				100	1	
AC1416-1	高速型 High Speed	16	20	36000	10	4	-45~+80
AC1416-2	中速型 Middle Speed				70	2	
AC1416-3	低速型 Low Speed				150	1	
AC1416-1C	高速型 High Speed	16	20	35000	10	4	-45~+80
AC1416-2C	中速型 Middle Speed				70	2	
AC1416-3C	低速型 Low Speed				150	1	
AC1425-1	高速型 High Speed	25	30	38000	15	4	-45~+80
AC1425-2	中速型 Middle Speed				100	2	
AC1425-3	低速型 Low Speed				180	1	

技术参数 / Specifications

AC 不可调自动补偿系列 (AC Self-compensation Series)

型号 Model	描述 Describe	行程 Stroke	最大吸收能量 Energy Per Cyle	小时吸收能量E Energy Per Hour	最大有效重量 Effective Weight	最高撞击速度 Impact Speed	工作温度 Temperature
		MM	NM	NM	KG	m/s	℃
AC1612-1	高速型 High Speed	12	18	37000	8	4	-45~+80
AC1612-2	中速型 Middle Speed				50	2	
AC1612-3	低速型 Low Speed				100	1	
AC2016-1	高速型 High Speed	16	35	39000	30	4	-45~+80
AC2016-2	中速型 Middle Speed				200	2	
AC2016-3	低速型 Low Speed				700	1	
AC2020-1	高速型 High Speed	20	40	42000	30	4.5	-45~+80
AC2020-2	中速型 Middle Speed				200	2.5	
AC2020-3	低速型 Low Speed				700	1	
AC2030-1	高速型 High Speed	30	50	48000	30	4.5	-45~+80
AC2030-2	中速型 Middle Speed				200	2.5	
AC2030-3	低速型 Low Speed				700	1	
AC2040-1	高速型 High Speed	40	60	55000	50	4.5	-45~+80
AC2040-2	中速型 Middle Speed				300	2.5	
AC2040-3	低速型 Low Speed				900	1	
AC2050-1	高速型 High Speed	50	70	60000	60	4.5	-45~+80
AC2050-2	中速型 Middle Speed				400	2.5	
AC2050-3	低速型 Low Speed				1200	1	
AC2525-1	高速型 High Speed	25	85	57000	200	4.5	-45~+80
AC2525-2	中速型 Middle Speed				800	2.5	
AC2525-3	低速型 Low Speed				1300	1	
AC2530-1	高速型 High Speed	30	95	60000	200	4	-45~+80
AC2530-2	中速型 Middle Speed				800	2.5	
AC2530-3	低速型 Low Speed				1300	1	
AC2540-1	高速型 High Speed	40	120	75000	300	4	-45~+80
AC2540-2	中速型 Middle Speed				1200	2.5	
AC2540-3	低速型 Low Speed				2000	1	
AC2550-1	高速型 High Speed	50	130	90000	200	4	-45~+80
AC2550-2	中速型 Middle Speed				1100	2.5	
AC2550-3	低速型 Low Speed				1600	1	
AC2580-1	高速型 High Speed	80	160	120000	300	4	-45~+80
AC2580-2	中速型 Middle Speed				1300	2.5	
AC2580-3	低速型 Low Speed				2000	1	
AC2725-1	高速型 High Speed	25	140	85000	400	4	-45~+80
AC2725-2	中速型 Middle Speed				1000	2.5	
AC2725-3	低速型 Low Speed				2200	1	
AC2750-1	高速型 High Speed	50	250	95000	600	4	-45~+80
AC2750-2	中速型 Middle Speed				1500	2.5	
AC2750-3	低速型 Low Speed				2500	1	
AC3325-1	高速型 High Speed	25	180	100000	800	4	-45~+80
AC3325-2	中速型 Middle Speed				2000	2.5	
AC3325-3	低速型 Low Speed				2800	1	
AC3350-1	高速型 High Speed	50	350	120000	1200	4	-45~+80
AC3350-2	中速型 Middle Speed				2500	2.5	
AC3350-3	低速型 Low Speed				3400	1	
AC3625-1	高速型 High Speed	25	180	125000	800	4	-45~+80
AC3625-2	中速型 Middle Speed				2000	2.5	
AC3625-3	低速型 Low Speed				2800	1	

注：工作温度低于-20℃或高于80℃需定制
有效重量和冲击速度超过范围时需定制

Note:Customization is needed if the temperature is lower than -20℃ or higher than 80℃
Customization is needed if the effective weight and impact speed out of the range

技术参数 / Specifications

AC 不可调自动补偿系列 (AC Self-compensation Series)

型号 Model	描述 Describe	行程 Stroke	最大吸收能量 Energy Per Cyle	小时吸收能量E Energy Per Hour	最大有效重量 Effective Weight	最高撞击速度 Impact Speed	工作温度 Temperature
		MM	NM	NM	KG	m/s	℃
AC3650-1	高速型 High Speed	50	350	150000	1200	4	-45~+80
AC3650-2	中速型 Middle Speed				2500	2.5	
AC3650-3	低速型 Low Speed				3400	1	
AC3660-1	高速型 High Speed	60	300	150000	1500	4	-45~+80
AC3660-2	中速型 Middle Speed				2800	2.5	
AC3660-3	低速型 Low Speed				4000	1	

AC-S系列（AC-S Self-compensation Series）

型号 Model	描述 Describe	行程 Stroke	最大吸收能量 Energy Per Cyle	小时吸收能量E Energy Per Hour	最大有效重量 Effective Weight	最高撞击速度 Impact Speed	工作温度 Temperature
		MM	NM	NM	KG	m/s	℃
AC0806-S	标准型（Standard）	6	3	7000	6	5	-45~+80
AC1007-S	标准型（Standard）	7	6	12400	12	5	-45~+80
AC1210-S	标准型（Standard）	10	9	17800	25	5	-45~+80
AC1412-S	标准型（Standard）	12	20	33000	40	5	-45~+80
AC1412-SM	标准短型（Standard）	12	20	33000	40	5	-45~+80
AC2015-S	标准型（Standard）	15	59	38000	120	5	-45~+80
AC2019-S	标准型（Standard）	19	70	49000	145	5	-45~+80
AC2525-S	标准型（Standard）	25	80	60000	180	5	-45~+80
AC2725-S	标准型（Standard）	25	147	72000	400	5	-45~+80

ACD双向缓冲器系列（ACD Double Acting Self-compensation Series）

型号 Model	描述 Describe	行程 Stroke	最大吸收能量 Energy Per Cyle	小时吸收能量E Energy Per Hour	最大有效重量 Effective Weight	最高撞击速度 Impact Speed	工作温度 Temperature
		MM	NM	NM	KG	m/s	℃
ACD2030-1	高速双向（High Speed）	30	45	55000	40	4.5	-45~+80
ACD2030-2	中速双向（Middle Speed）				300	2.5	
ACD2030-3	低速双向（Low Speed）				900	1	
ACD2035-1	高速双向（High Speed）	35	55	63000	40	4.5	-45~+80
ACD2035-2	中速双向（Middle Speed）				200	2.5	
ACD2035-3	低速双向（Low Speed）				900	1	
ACD2050-2	中速双向（Middle Speed）	50	65	68000	1000	4.5	-45~+80
ACD2050-2W	中速双向（Middle Speed）				1000	4.5	

AD可调系列（AD Adjustable Series）

型号 Model	描述 Describe	行程 Stroke	最大吸收能量 Energy Per Cyle	小时吸收能量E Energy Per Hour	最大有效重量 Effective Weight	最高撞击速度 Impact Speed	工作温度 Temperature
		MM	NM	NM	KG	m/s	℃
AD1007	标准型（Standard）	7	6	1240	50	4	-45~+80
ACD1210	标准型（Standard）	10	10	19000	70	4	-45~+80
AD1410	标准型（Standard）	10	20	22000	80	4	-45~+80
AD1410-5	低速型（Low Speed）				150	1	
AD1410-C	标准短型（Standard）	10	20	25000	80	4	-45~+80
AD1410-C-5	低速短型（Low Speed）				150	1	
AD1412	标准型（Standard）	12	22	25000	80	4	-45~+80
AD1412-5	低速型（Low Speed）				190	1	

注：工作温度低于-20℃或高于80℃需定制
有效重量和冲击速度超过范围时需定制

Note:Customization is needed if the temperature is lower than -20℃ or higher than 80℃
Customization is needed if the effective weight and impact speed out of the range

技术参数 / Specifications

AD可调系列（AD Adjustable Series）

型号 Model	描述 Describe	行程 Stroke	最大吸收能量 Energy Per Cyle	小时吸收能量E Energy Per Hour	最大有效重量 Effective Weight	最高撞击速度 Impact Speed	工作温度 Temperature
		MM	NM	NM	KG	m/s	℃
AD1415	标准型（Standard）	15	23	28000	80	4	-45~+80
AD1415-5	低速型(Low Speed)				190	1	
AD1612	标准型（Standard）	12	22	28000	90	4	-45~+80
AD1612-5	低速型(Low Speed)				200	1	
AD1620	标准型（Standard）	20	25	30000	100	4	-45~+80
AD1620-5	低速型(Low Speed)				220	1	
AD2016-C	标准型（Standard）	16	28	35000	220	4	-45~+80
AD2016-5	低速型(Low Speed)				320	1	
AD2016	标准短型（Standard）	16	28	31000	200	4	-45~+80
AD2016-C-5	低速短型(Low Speed)				290	1	
AD2016-K	高吸能型(High Energy)	16	42	30000	290	4	-45~+80
AD2020	标准型（Standard）	20	40	42000	300	4	-45~+80
AD2020-5	低速型(Low Speed)				390	1	
AD2025	标准型（Standard）	25	45	45000	350	4	-45~+80
AD2025-5	低速型(Low Speed)				455	1	
AD2525	标准型（Standard）	25	85	54000	400	4	-45~+80
AD2525-5	低速型(Low Speed)				620	1	
AD2525-K	高吸能型(High Energy)	25	105	54000	1300	4	-45~+80
AD2530	标准型（Standard）	30	95	60000	400	4	-45~+80
AD2530-5	低速型(Low Speed)				720	1	
AD2540	标准型（Standard）	40	100	80000	700	4	-45~+80
AD2540-5	低速型(Low Speed)				1000	1	
AD2550	标准型（Standard）	50	130	90000	720	4	-45~+80
AD2550-5	低速型(Low Speed)				1300	1	
AD2580	标准型（Standard）	80	150	120000	800	4	-45~+80
AD2580-5	低速型(Low Speed)				1350	1	
AD2725	标准型（Standard）	25	85	70000	500	4	-45~+80
AD2725-K	高吸能型(High Energy)	25	130	70000	1300	4	-45~+80
AD2750	标准型（Standard）	50	130	95000	720	4	-45~+80
AD3325	标准型（Standard）	25	180	70000	1400	4	-45~+80
AD3325-5	低速型(Low Speed)				2000	1	
AD3325-K	高吸能型(High Energy)	25	260	72000	2700	4	-45~+80
AD3350	标准型（Standard）	50	350	100000	1400	4	-45~+80
AD3350-5	低速型(Low Speed)				2500	1	
AD3350-K	高吸能型(High Energy)	50	450	105000	3000	4	-45~+80
AD3625	标准型（Standard）	25	180	81000	1400	4	-45~+80
AD3625-5	低速型(Low Speed)				2000	1	
AD3625-K	高吸能型(High Energy)	25	260	95000	2700	4	-45~+80
AD3650	标准型（Standard）	50	350	110000	1400	4	-45~+80
AD3650-5	低速型(Low Speed)				2000	1	
AD3650-K	高吸能型(High Energy)	50	450	112000	3000	4	-45~+80
AD4225	标准型（Standard）	25	260	125000	3000	4	-45~+80
AD4225-K	高吸能型(High Energy)	25	350	126000	3600	4	-45~+80
AD4250	标准型（Standard）	50	500	150000	4000	4	-45~+80
AD4250-K	高吸能型(High Energy)	50	680	167000	6000	4	-45~+80
AD4275	标准型（Standard）	75	750	180000	6000	4	-45~+80
AD4525-K	高吸能型(High Energy)	25	350	135000	3540	4	-45~+80
AD4550-K	高吸能型(High Energy)	50	680	175000	7100	4	-45~+80
AD64050	标准型（Standard）	50	2080	185000	12727	2	-45~+80

注：工作温度低于-20℃或高于80℃需定制
有效重量和冲击速度超过范围时需定制

Note:Customization is needed if the temperature is lower than -20℃ or higher than 80℃
Customization is needed if the effective weight and impact speed out of the range

技术参数 / Specifications

AD可调系列（AD Adjustable Series）							
型号 Model	描述 Describe	行程 Stroke	最大吸收能量 Energy Per Cyle	小时吸收能量E Energy Per Hour	最大有效重量 Effective Weight	最高撞击速度 Impact Speed	工作温度 Temperature
		MM	NM	NM	KG	m/s	℃
AD64100	标准型（Standard）	100	4280	204000	18181	2	-45~+80
AD64150	标准型（Standard）	150	6150	248000	23636	2	-45~+80
AD85050	标准型（Standard）	50	2300	372000	37000	2	-45~+80
AD85090	标准型（Standard）	90	4000	652000	40000	2	-45~+80
AD85125	标准型（Standard）	125	5700	933000	43000	2	-45~+80
AD85165	标准型（Standard）	165	7300	1215000	45000	2	-45~+80

短行程液压缓冲器（Compact Shock Absorbers）							
型号 Model	描述 Describe	行程 Stroke	最大吸收能量 Energy Per Cyle	小时吸收能量E Energy Per Hour	最大有效重量 Effective Weight	最高撞击速度 Impact Speed	工作温度 Temperature
		MM	NM	NM	KG	m/s	℃
AC2007	标准型（Standard）	7	35	68000	190	4	-45~+80
AC2508	标准型（Standard）	8	50	75000	285	4	-45~+80
AC2708	标准型（Standard）	8	65	80000	320	4	-45~+80
AC3012	标准型（Standard）	12	83	105000	490	4	-45~+80
AC3212	标准型（Standard）	12	105	135000	690	4	-45~+80

HR液压速度控制系统（Hydraulic Speed Controllers）				
型号 Model	描述 Describe	最大行程 Stroke	最大负荷 Maxload	工作温度 Temperature
		MM	kgf	℃
HR系列弹簧返回型（HR Spring Return Type）				
HR2415	Φ24系列(Φ24series)	15	350	-45~+80
HR2430		30	350	-45~+80
HR2460		60	350	-45~+80
HR2480		80	350	-45~+80
HR24100		100	350	-45~+80
HR3140	Φ31系列(Φ31series)	40	550	-45~+80
HR3160		60	550	-45~+80
HR31100		100	550	-45~+80
HR系列空气返回型（HR Air Return Type）				
HR2440A	Φ24系列(Φ24series)	40	350	-45~+80
HR2460A		60	350	-45~+80
HR2480A		80	350	-45~+80
HR24100A		100	350	-45~+80
HR3180A	Φ31系列(Φ31series)	80	550	-45~+80
HR31130A		130	550	-45~+80
HR31180A		180	550	-45~+80

注：工作温度低于-20℃或高于80℃需定制
有效重量和冲击速度超过范围时需定制
Note:Customization is needed if the temperature is lower than -20℃ or higher than 80℃
Customization is needed if the effective weight and impact speed out of the range

样册仅供参考，以实物为准
The catalog is for reference only and the actual product shall prevail.

产品繁多，且不断推陈出新及改良功能，本公司保留变更规格的权利，恕不另行通知。
版权所有，翻录必究。
Products are in great varieties,new products are constantly recommended and their functions are improved.Our company reserves the right to change the specifications without giving separate notice.All right reserved.